MCRP 4-11.8A

Food Service Reference

U.S. Marine Corps

PCN 144 000095 00

To Our Readers

Changes: Readers of this publication are encouraged to submit suggestions and changes that will improve it. Recommendations may be sent directly to Commanding General, Marine Corps Combat Development Command, Doctrine Division (C 42), 3300 Russell Road, Suite 318A, Quantico, VA 22134-5021 or by fax to 703-784-2917 (DSN 278-2917) or by E-mail to **morgann@mccdc.usmc.mil**. Recommendations should include the following information:

- Location of change
  - Publication number and title
  - Current page number
  - Paragraph number (if applicable)
  - Line number
  - Figure or table number (if applicable)
- Nature of change
  - Add, delete
  - Proposed new text, preferably double-spaced and typewritten
- Justification and/or source of change

Additional copies: A printed copy of this publication may be obtained from Marine Corps Logistics Base, Albany, GA 31704-5001, by following the instructions in MCBul 5600, *Marine Corps Doctrinal Publications Status.* An electronic copy may be obtained from the Doctrine Division, MCCDC, world wide web home page which is found at the following universal reference locator: **http://www.doctrine.usmc.mil**.

Unless otherwise stated, whenever the masculine gender is used, both men and women are included.

DEPARTMENT OF THE NAVY
Headquarters United States Marine Corps
Washington, D.C. 20380-1775

27 September 2001

FOREWORD

Marine Corps Reference Publication (MCRP) 4-11.8A, *Food Services Reference*, provides guidance for commanders, staffs, logisticians, food service officers, supply officers, food technicians, mess chiefs, subsistence supply, and food service Marines. It describes Marine Corps food services operations in an expeditionary environment, discusses the Marine Corps Field Feeding System (MCFFS), and also incorporates information and procedures developed during the Marine Corps Combat Development Command food service quick response study and field trials. Tactics, techniques, and procedures from other Service manuals that apply to Marine Corps operations have been incorporated as well to provide comprehensive, informative coverage of food services operations in the Marine Corps.

MCRP 4-11-8A introduces the Marine Corps food service organization and support structure; discusses the general responsibilities of food service personnel; describes the rations/menu types used in field feeding; details planning considerations, safety issues, equipment, sanitation, and training; and depicts an overview of the MCFFS. The MCFFS supports the Marine air-ground task force in an expeditionary environment through flexibility in feeding methods. The MCFFS furnishes the capability to provide Marines the right meal at the right place at the right time. The feeding methods, rations, and equipment described herein provide commanders a variety of options to support sustained feeding operations in an expeditionary environment.

Reviewed and approved this date.

BY DIRECTION OF THE COMMANDANT OF THE MARINE CORPS

/s/
EDWARD HANLON, JR.
Lieutenant General, U.S. Marine Corps
Commanding General
Marine Corps Combat Development Command

DISTRIBUTION: 144 000095 00

FOOD SERVICES REFERENCE

TABLE OF CONTENTS

Chapter 1. Fundamentals

Background 1-1
Food Service Support 1-1
Food Service Support Responsibilities 1-2
    Defense Logistics Agency 1-2
    Defense Supply Center Philadelphia 1-2
    Deputy Chief of Staff for Installations and Logistics 1-2
Theater Subsistence Supply Responsibilities 1-2
Main Elements of the Marine Corps Field Feeding System 1-4
    Deployment Plans 1-4
    Ration Availability 1-4
Tactical Food Service Responsibilities 1-4
    Food Service Officer 1-4
    Mess Chief 1-4
    Food Service Personnel 1-5
    Mess Attendant Support 1-5
Combat Service Support 1-5
Operations 1-5
Combat Field Feeding/Base Camp Feeding 1-5
Area Feeding 1-5
Forward Unit Feeding 1-6
Support Under Adverse Conditions 1-6
Military Operations Other Than War 1-6
Environmental Training and Integration 1-6

Chapter 2. MCFFS Rations and Menus

Rations 2-1
    A Ration Enhancements 2-1
    Unitized B Ration 2-2
    Standard Medical B Ration 2-1
    Dental Liquid 2-2
    Unitized Group Ration-Heat and Serve 2-2
    Packaged Operational Rations 2-3
    Enhancements 2-3
Feeding Standard 2-3

Chapter 3. MCFFS Equipment

Individual Ration Heating Devices 3-1
Canteen Cup Stand 3-1
Ration Supplement, Flameless Heater 3-1
Tray Ration Heating System 3-1
Field Mess Equipment 3-1
M2 Burner Unit 3-1
M59 Field Range Outfit and Accessories 3-2
Immersion Burners 3-4
Insulated Food Containers 3-4
Generator, Diesel Engine, Skid-Mounted, Mobile Electric Power 3-6
Reverse Osmosis Water Purification Unit 3-6
M-80 Water Heater 3-6
Refrigerated Container, Field, 8 by 8 by 10 Feet 3-8
Refrigeration Unit for Rigid Box, 4,000 BTU, Model ERU-4E 3-8
Lightweight Camouflage Screen and Support Systems 3-9
Tent, General Purpose, Medium 3-9
Equipment from Other Services 3-10
Field Sanitation Center 3-10
Mobile Kitchen Trailer 3-10
Future Equipment 3-13

Chapter 4. Deployment Planning

Theater Activation 4-1
Host-Nation Feeding 4-1
Host-Nation Support 4-1
Host-Nation Messing 4-1
Contract Feeding 4-2
Unit Preparation 4-2
Manpower Requirements 4-2
Equipment Requirements 4-2
Fuel Requirements 4-3
Class IX Requirements 4-3
Water Requirements 4-4
Security 4-4
Records and Logs 4-4
Equipment Status 4-4
Training 4-4
Supply Levels 4-4
Push System 4-4
Pull System 4-4
Distribution Variances 4-4
Other Planning Requirements 4-5
Location 4-5
Disposal 4-5
Ice 4-5

Chapter 5. Deployment and Redeployment

Procedures 5-1
Unit Movement 5-1
Class I Site Selection 5-1
Size 5-1
Concealment and Cover 5-1
Defense 5-2
Field Mess Site Selection 5-4
Field Mess Site Layout 5-4
Field Feeding Procedures 5-4
MCFFS Accountability 5-7
Receipt 5-7
Inventory 5-7
Reconciliation 5-7
Accounting 5-7
Cold Weather Field Feeding 5-8
Hot Weather Field Feeding 5-8
Camouflage 5-8
Planning Factors for Redeployment 5-9
Preparing for Redeployment 5-9
Closing the Deployment Site 5-9
Moving the Unit to the Home Station 5-9
Accounting for Residuals 5-9

Chapter 6. Class I Storage and Issue Procedures

Subsistence Storage at the Class I Point 6-1
Types of Storage 6-1
Methods 6-1
Perishable Storage 6-1
Temperature 6-1
Humidity 6-1
Air Circulation 6-1
Product Compatibility 6-1
Storage Precautions 6-1
Semi-Perishable Storage 6-2
Correct Storage 6-2
Freezing Temperatures 6-2
High Temperatures 6-2
High Humidity 6-2
Exposure to Light 6-2
Pests 6-3
Handling of the MRE in Freezing Temperatures 6-3
Storing and Handling the RSFH 6-3
Packaging 6-3
Storage 6-3
Transportation (Bulk Pack Only) 6-4

Sanitation at Storage Points 6-4
Personnel 6-4
Area and Equipment 6-4
Transportation 6-4
Pest Control 6-4
Insects 6-4
Rodents 6-5
Inspections 6-5
Responsibilities 6-5
Inspection Types 6-5
Inspection Criteria 6-5
Ration Issue 6-6

Chapter 7. Safety and Sanitation

General Considerations 7-1
Combat Field Feeding 7-2
Base Camp Feeding 7-2
Food Management 7-2
Trash Management 7-3
Protection from Contamination 7-4
Personnel Protection 7-4
Food Protection 7-4
Food Inspection 7-5
Disposal 7-6
Decontamination 7-6

Appendices

A Food Service Deployment Planning Checklist A-1
B Glossary B-1
C References and Related Publications C-1

CHAPTER 1. FUNDAMENTALS

Background

Field rations have evolved significantly since our nation's beginning. Initially, individual colonies provided subsistence for their militias. Inefficiencies of this system resulted in the establishment of the Office of Commissary General by the Continental Congress, who delineated the "daily ration" on November 4, 1775. However, this ration was seldom enjoyed by the troops. In fact, during the winter spent at Valley Forge, Washington's troops subsisted on "fire cakes," made from a paste of flour and water.

By the Civil War, conditions had not improved much. When food was available, it was generally lacking in nutritional balance. Most troops ate little more than salted meat and hardtack. Coffee, however, was generally available in large quantities. Field feeding improved somewhat during World War I because cooks were becoming school-trained on proper food handling techniques, dehydrated vegetables appeared on the menu, and refrigeration became available. In 1917–18, the United States (U.S.) spent over $727 million on subsistence, more than was spent in all previous wars. The first packaged operational rations, K and C rations, were introduced during World War II. Additionally, most of the field food service equipment used today was first employed in World War II to prepare A and B rations for those not on the front lines.

By the early 1950s, there were more than 650 recipes. In Korea, men in forward areas were provided two hot meals a day. Generally, it was believed that the closer you were to the front, the better you ate. In Vietnam, troops at fire support bases ate as well, if not better, than troops in the states. There were dairy and ice cream plants in country managed by American companies. Occasionally, units on patrol had hot meals delivered on site in insulated food containers. When hot meals could not be served, troops had the meal, combat, individual (MCI) and the Long Range Patrol Ration, nicknamed "Lurp." Although not as acceptable as hot meals, they were nutritionally adequate to sustain troops for days at a time.

In the early 1980s, the meal, ready-to-eat (MRE) was developed to replace the MCI. Its packaging is lighter, yet more durable, and it has less sodium and fat than the MCI. Three MREs provide 3,900 calories per day, 4,500 when augmented with bread, shelf stable. Although studies have concluded that individuals can subsist solely on MREs for up to 21 days, morale generally began to suffer after 2 or 3 days. The tray (T) ration was developed as a means of providing hot meals to forward deployed units and as an effort to provide a bridge between the MRE to B or A rations. The T ration, while more acceptable than the MRE, begins to have the same effect on morale very quickly. As the Marine Corps develops the concepts of operational maneuver from the sea (OMFTS) and ship-to-objective maneuver (STOM), the mission of providing hot meals to forward units becomes an increasingly difficult challenge.

Food Service Support

Food services is a command support service in that it is an inherent capability normally available at the organizational level. As a command support service, it is a subfunction of services, categorized under the warfighting function of logistics. However, staff cognizance for food services is in a period of transition. Emerging concepts, with regard to the supporting establishment, envision a higher degree of outsourcing and improved business practices in order to free personnel and return structure to the operating forces. Moreover, those services functions, which are currently the responsibility of the operating forces, are also being examined to see if they might be accomplished more efficiently elsewhere. Hence, the trend for services responsibility is a shift toward more centralized control and movement farther away from the forward edge of the battle area (FEBA).

The impact of this trend on food services is a continual examination that will refine equipment and rations, reduce manpower expenditure, and potentially centralize control. While the final outcome of how food services will look in an OMFTS environment is uncertain, responsibility for food services will shift from being a command support service, to being a function provided under the auspices of services by the combat service support element (CSSE) of the MAGTF.

As logistics is a national and Service responsibility, so is subsistence and food service. Subsistence and food service in the joint arena are also considered areas of common item support. Accordingly, responsibility for supply of subsistence items after D+60 is normally assigned by the commander in chief (CINC) to a Service component command, normally the dominant or most capable service user. While allied nations are also responsible to provide their own subsistence support, coalition efforts in the past have received at least temporary support from the most capable U.S. Service until allied logistics capabilities matured. Prior to that first 60 days and the establishment of a common item support manager, these operations have often been supported by the Marines.

Food Service Support Responsibilities

Subsistence management entails the best use of food supplies to satisfy the nutritional needs of Marines. The Deputy Chief of Staff for Installations and Logistics (DC/S, I&L [LFS-4]) is the principal staff advisor to the Commandant of the Marine Corps (CMC) on subsistence matters.

Defense Logistics Agency

As a staff headquarters, Defense Logistics Agency (DLA) controls buying, inspecting, storing, and distributing food and ration supplement sundries packs (RSSPs) worldwide.

Defense Supply Center Philadelphia

Defense Supply Center Philadelphia (DSCP) is an operating element of the DLA, responsible for procuring, inspecting, storing, and distributing subsistence supplies. DSCP operates a number of storage and distribution centers. It is also responsible for areas under the Worldwide Information Management System (WIMS). Under the WIMS, the Marine Corps submits requirements for war reserve stock (WRS), by national stock number (NSN), to DSCP. Requirements are based on contingency plans for deployment.

Deputy Chief of Staff for Installations and Logistics

The DC/S, I&L (LFS-4) is responsible for reviewing, coordinating, evaluating, and justifying programs and budgets. Under contingency deployments, LFS-4 approves the use of the RSSPs and determines the initial item composition. The theater commander may recommend changes in items and quantities as required by theater conditions. LFS-4 also provides policy guidance, supervision, and technical assistance on the acquisition, storage, issue, and accountability of subsistence items and equipment, facility design, sanitation issues, and contracted food services. It also works with DSCP to develop plans for the use of excess stocks and rotating WRS.

Theater Subsistence Supply Responsibilities

Subsistence supply support after D+60 is normally an Army mission (see fig. 1-1). The U.S. Army's theater subsistence supply procedures are addressed in Field Manual (FM) 10-23, *Basic Doctrine for Army Field Feeding and Class I Operations Management*. At the Marine Corps forces/Marine expeditionary forces (MARFOR/MEF) level, force commanders are responsible for determining operational feeding policy. A feeding concept is established early in planning to reduce potential problems during operations. The

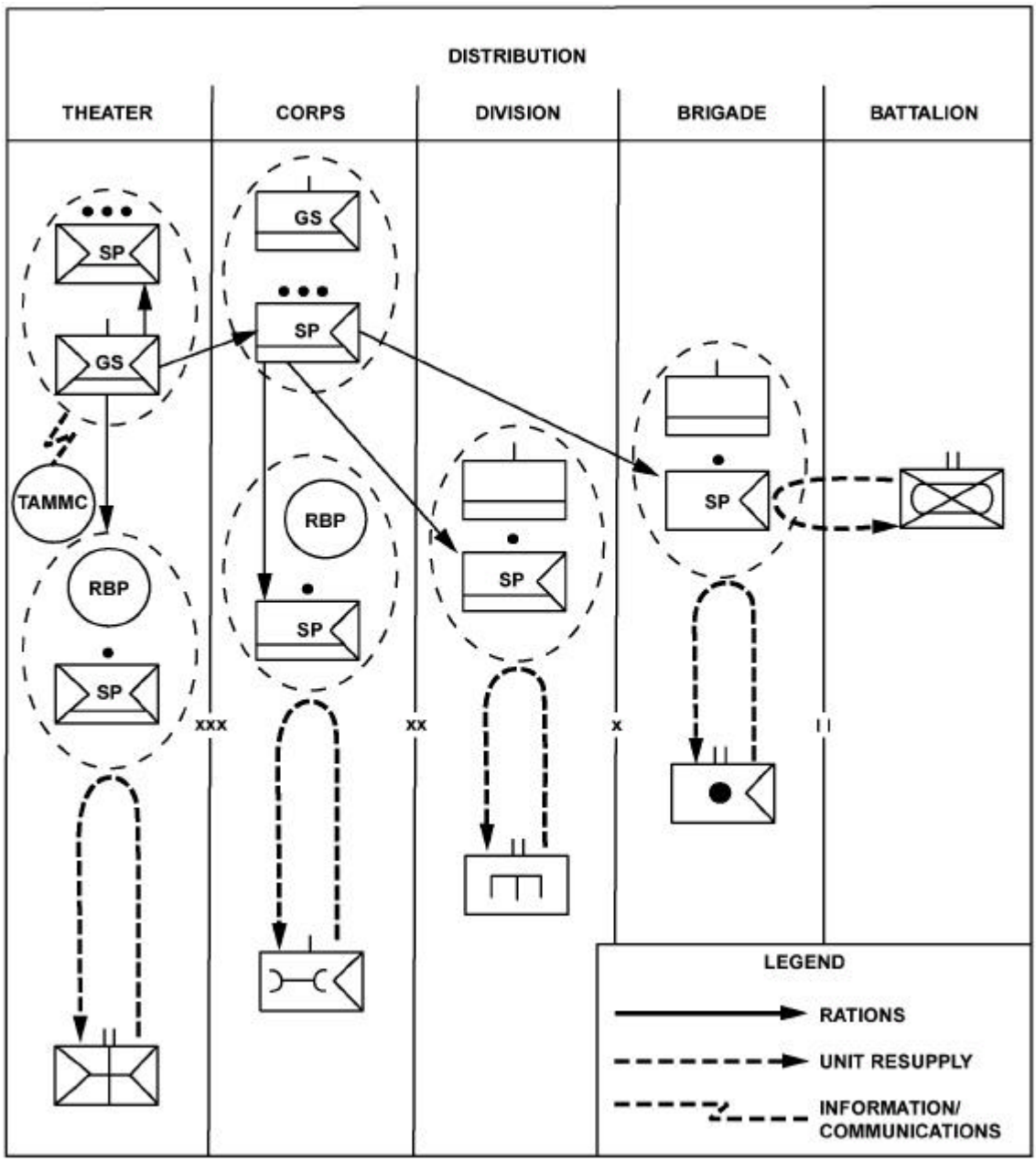

Figure 1-1. Flow of Rations in the Theater of Operations.

normal lead-time for rations is 60 days. In developing the feeding concept, the following are considered:

- Climate and geographic environment.
- Availability of fixed facilities, buildings, and equipment.
- Undesirable features relative to subsistence storage and sanitary conditions within the area of responsibility (AOR).
- Impact of prolonged subsistence on MREs on troop morale.

The food service officer (FSO) at the MEF and major subordinate command level makes specific recommendations to the commander regarding the implementation of the operational feeding policy and development of the feeding concept.

Main Elements of the Marine Corps Field Feeding System

As a total system, the Marine Corps Field Fielding System (MCFFS) has three main elements: a family of rations; equipment to support storage, distribution, and preparation of rations; and personnel to operate the system. This system also recognizes the uniqueness of medical units and special considerations required for the health care of Marines. The Tray Ration Heating System (TRHS) is ideally suited for mobile units while the static field mess better supports a base camp. New equipment under development will further enhance food service flexibility. New field sanitation units are replacing the current immersion water heaters, and a rapid deployment kitchen will eventually replace the traditional static field mess.

Deployment Plans

Deployment plans should call for using MREs initially and, as the theater stabilizes, progressing to meal selection from a family of rations that includes MRE rations, A rations, unitized B rations (UBR), and unitized group rations-heat and serve (UGR-H&S). Medical units' deployment plans must include the medical B ration. The operation order (OPORD) will provide food service personnel with the guidelines on the ration mix for the operation.

Ration Availability

Not all types of rations may be available in each area of operations (AO) at the onset of hostilities. The AO Class I manager (with guidance from the commander) must determine the rations to be moved forward using a push system. When logistics personnel, rations, transportation, and equipment are in place, a pull system may be implemented. Using the pull system, the unit places a demand (ration request), and combat service support (CSS) elements react to meet that demand.

Tactical Food Service Responsibilities

The commander is responsible for the field food service operation of the unit. The commander and other food service personnel ensure that—

- The unit has all authorized field kitchen equipment listed in the table of equipment (T/E).
- Authorized administrative, medical, field sanitation teams, and supply personnel are available and trained.
- The unit basic load (a minimum of 3 day's supply of operational rations) is on hand.
- Adequate transportation support capabilities are available to move personnel, equipment, subsistence, ice, water, fuel, trash, and residual rations.
- Sufficient mess attendant support is available for field messes preparing A rations, UBR, UGR-H&S.
- Personnel data (present-for-duty by Service component, remote site feeding, and personnel paying by cash) is provided to the mess chief in a timely manner.

Food Service Officer

The FSO acts as a liaison between the commander and the mess chief in all matters pertaining to the food service operation. The FSO's main responsibilities are to advise commanders, assist the mess chief, and assist in resolving food service-related problems. The FSO must be familiar with all areas of the MCFFS and must provide assistance in field operations from as early as possible in the planning phase until the mission is complete.

Mess Chief

The mess chief is charged with providing the best possible food service support to the Marines on the battlefield. The mess chief must know all aspects of field food service operations and make the most efficient use of assigned personnel, equipment, facilities, and supplies. The mess chief must coordinate closely with the commander and the FSO and be involved as early

as possible in the operational planning phase. The mess chief must continually improve the food service team's proficiency, by ensuring that all assigned personnel are properly trained to work as part of the team.

Food Service Personnel

The MCFFS provides food service Marines to prepare all meals in the family of rations. Staffing is based on the feeding standard as established in Chapter 2, MCFFS Rations and Menus. The MCFFS gives commanders the capability to serve two UBR or UGR-H&S meals every day—mission, enemy, terrain and weather, troops and support available, time available (METT-T) dependent.

Mess Attendant Support

When the commander determines which UBR or UGR-H&S will be served, the unit must provide mess attendant support to the food service section. The use of UBR increases the sanitation workload. Staffing of food service personnel was not designed to handle this increase without unit augmentation. The number of personnel required depends on the unit feeding strength, mission, and remote site feeding versus the consolidated feeding requirement. Consult with the food service officer when determining required mess attendant staffing.

Combat Service Support

Material readiness platoons in the FSSG are tasked to provide the personnel and equipment to support MAGTF in an operational theater. Class I CSS units support all subsistence requirements once the theater has matured sufficiently to accommodate the family of rations. Material readiness platoons work under the operational control of the respective CSSE. Platoons are organized to provide support at general support (GS) and direct support (DS) levels. Teams from the subsistence platoons operate at the DS ration issue points. DS teams are under the operational control of the supported DS unit commander while operating in the DS unit's AO.

Operations

Food service personnel support Marines in other than war operations ranging from humanitarian assistance, to peacekeeping operations, to armed conflict. Differences in feeding operations among ground combat element (GCE), aviation combat element (ACE), and CSSE will reflect the differing missions of each element. The MCFFS adjusts for those differences and provides a variety of equipment and a family of rations to support any situation.

Combat Field Feeding/Base Camp Feeding

The term "combat field feeding" refers to expeditionary feeding of forward units or elements, both in combat and in training. When supporting units are on the move, field feeding must be highly mobile. Employment of the traditional static field mess is usually not feasible in supporting rapidly moving units. The term "base camp feeding" refers to the traditional field mess. Base camp feeding can also be employed in both combat and in training, depending on the mission. Frequently, CSS and ACE elements operate in environments conducive to this type of feeding.

Area Feeding

Area feeding is food service support provided by a feeding unit to Marines of other units in or passing through the vicinity. Feeding responsibility is based on dependency or through task organization. Area feeding is flexible because tasks are organized in planning documents for required cooking resources. Unit commanders, team leaders, and first sergeants coordinate directly with each other. Technical assistance should be obtained from the supporting food service technician during the planning phase. Timely coordination is critical to ensure that adequate subsistence is on hand at the designated feeding unit.

The feeding plan and dependency associations should be in the administration annex or the logistics annex of the OPORDs and operation plans (OPLANs). The

MCFFS can also be used during task-organized operations and deployments. Commanders ensure that Marines are subsisted at the established standard through the use of area feeding, battalion-level feeding, and remote feeding. The FSO plays a critical role in task-organized or area feeding situations. The FSO must be called on during the earliest possible phases of planning for an operation.

Forward Unit Feeding

Under the MCFFS, infantry units have food service Marines and equipment assigned to their table of organization (T/O) and T/E, providing commanders a capability to employ resources as the tactical situation permits. One option is for food to be prepared in the rear and sent forward to be served.

A second option is to send food service Marines (equipped with a TRHS and a high mobility multipurpose wheeled vehicle [HMMWV]) forward to support different/separate units. This option provides a choice of cooking some of the food at a field mess and completing the meal with limited food preparation forward.

The commander should control these arrangements through an approved field feeding plan or standing operating procedures (SOP).

Support Under Adverse Conditions

The MCFFS enhances the commander's ability to support Marines while under adverse conditions. It reduces requirements for labor, water, and fuel. When using the heat-on-the-move option of the TRHS, the MCFFS increases mobility, effectiveness, and responsiveness. This system also reduces the administrative burden on unit commanders and food service personnel.

Military Operations Other Than War

Although methods of feeding and accountability are designed to support military personnel, they could apply to feeding a civilian population needing assistance. However, the primary mission of food service and subsistence personnel is to provide food service and Class I CSS support to deployed forces. FSOs may be required to provide assistance in the development of requirements documents for the contracting of food service support in situations that require the support of a civilian population.

Environmental Training and Integration

The Marine Corps' environmental vision is to be a national leader in environmental and natural resource stewardship for present and future generations. Environmental stewardship must be an integral part of all deployments and operations. The MCFFS will provide required levels of food service support while permitting environmental concerns to be properly addressed. Marines are expected to serve as the Corps' environmental stewards. Each Marine has a personal and professional responsibility to understand and support the Marine Corps' environmental program. Proper management of resources and protection of our environment must be integrated in all training and operations planning. Commanders must stay current with federal, state, local, and/or host-nation laws regarding environmental concerns. Marines are expected to apply the most stringent requirements during all field operations.

CHAPTER 2. MCFFS RATIONS AND MENUS

Rations

A ration is an amount of food that is nutritionally adequate to subsist one person for 1 day. The Marine Corps has fielded a family of rations, and commanders must choose the appropriate ration mix according to their tactical and logistical situations. (The unitized B ration and the packaged operational rations constitute the primary rations used in the field.)

A Ration Enhancements

The A ration enhancements are perishable items that add variety, dietary fiber, and troop acceptability to the UBR feeding plan. Enhancements normally consist of milk, bread or bread-like products, apples, oranges, lettuce, tomatoes, and a combination of 50 percent fresh and 50 percent dehydrated eggs. Perishable items require refrigeration and increased transportation, fuel, equipment, and water requirements. The workload, liquid and solid waste disposal, and sanitation problems for food service personnel are also increased. Concurrent with the introduction of perishable rations into the theater of operations, refrigerated transportation and storage assets are required from the receiving theater subsistence distribution activity to the using field mess. Peacetime requirements for refrigeration continue to be satisfied by civilian direct hire and contractors. Other possible sources of refrigeration include existing T/E assets, host-nation support or local purchase from commercial sources.

Unitized B Ration

Unitized B rations consist of semi-perishable items, mainly canned and dehydrated, which do not require refrigeration. They are unitized in 100-portion modules, under a single NSN. Unitized B ration modules contain everything necessary to prepare 100 servings of a particular meal, to include paper products. There are 10 breakfast and 10 lunch/dinner UBR menus available.

The UBR is used for feeding in areas without refrigeration. It is also used in situations that do not permit resupply of perishable foods. It is designed to aid substitution of perishable items on a line-item basis.

Preparation Requirements

Personnel must be properly trained to prepare UBRs. The UGR must be reconstituted according to the procedures printed on or included in each container.

Water

To prepare food for 100 persons for 1 day, 64 to 86 (75 average) gallons of water are required. This includes water for beverages on the menu, but not for refilling canteens or for personal sanitation.

Time

Two cooks need approximately 2 to 3 hours to prepare a meal for 100 personnel; additional assistance is required for serving and sanitation.

Special Handling

All dehydrated meat items and certain other food items must be carefully handled during preparation to prevent the product from breaking apart. Fish must be prepared as close as possible to serving times. It is essential to follow the instructions on the can for dehydrated egg mix to ensure proper product consistency and quality. Cheese, applesauce, and cabbage must also be handled carefully.

Nutritional Data

The UBR provides approximately 4,300 calories per day (13 percent protein, 33 percent fat, and 54 percent carbohydrate).

Standard Medical B Ration

The standard medical B ration is used to subsist staff and patients in medical treatment facilities during organized food service operations when semi-perishable rations are required. For planning purposes, it is as-

sumed that 100 percent of the staff and 77 percent of the total patient strength will subsist on the medical B ration when semi-perishables are required. The remaining 23 percent of hospitalized patient strength will require modified diets of liquid medical B rations.

The basic medical B ration menus are the standard B ration menus, with added food items to satisfy nutritional and dietary requirements. Additional medical B ration-unique items are required for patient feeding. Special subsistence requirements to support the medical B ration menus are identified in Supply Bulletin (SB) 10-495-1, *Standard "B" Rations for Armed Forces*. They are required for medical feeding immediately when hospital units are set up in theater. Tables in SB 10-495-1 have been written to provide separate requirements for 100 patients or staff rations per day.

Dental Liquid

The dental liquid ration is designed for military personnel who are unable to eat solid foods due to broken jaws or other maxillofacial injuries. The components are easy to prepare and require no refrigeration prior to reconstitution. The consistency of the mixture can be varied by adjusting the amount of water added.

Preparation Requirements

Products are hydrated with water and mixed in a blender or whisked into solution if a blender is not available.

Characteristics

The components in the 5-day cycle menu consist of dehydrated food powders. When reconstituted with water, the products taste like their solid counterparts, but are in a liquid form and easily sipped through a straw. Milk shakes have also been developed and are used as between meal nourishments. The products are available in single-serving packages or ten-patient meal modules. The shelf life of each product is a minimum of 3 years at 80 °Fahrenheit (F).

Nutritional Data

Each menu, including three milk shake nourishments, provides an average of 3,500 calories (15 percent protein, 35 percent fat, and 50 percent carbohydrate). Each milk shake provides approximately 400 calories.

Unitized Group Ration-Heat and Serve

Unitized group rations-heat and serve are expeditionary rations that are fully prepared, thermally processed, shelf-stable foods developed for use with the TRHS. Most UGR-H&S items are packaged in rectangular pans; however, some vegetables are packaged in size #10 cans. UGR-H&S items include entrees, starches, vegetables, and desserts. Like the MRE, they must be enhanced with fresh fruits, vegetables, cereals, breads, beverages, and condiments when they are the sole diet beyond 3 days, or at the commander's discretion based on climatic conditions. UGR-H&S are unitized in 50-serving modules, and there are currently 7 breakfast and 14 lunch/dinner UGR-H&S menus available. UGR-H&S serve as a bridge from the MRE to a more nutritional and acceptable ration, and are not designed to be a replacement for the UBR. Long-term sole subsistence on UGR-H&S will have the same effect on physiology and morale as MREs. The ration is designed to have a shelf life of 18 months at 80 °F.

Enhancements

Bread and milk must be available with each UGR-H&S meal. Bread may be pouched or fresh. Milk may be fresh, powdered whole milk or ultra high thermostable (UHT). Two half-pint containers of milk are served for breakfast with cereal and one half-pint container is served for lunch and/or dinner.

Nutritional Data

The breakfast menus, including milk and bread enhancements, provide an average of 1,400 calories (16 percent protein, 31 percent fat, and 53 percent carbohydrates). The lunch or dinner menus, including bread and milk enhancements, provide an average of 1,500 calories (17 percent protein, 29 percent fat, and 54 percent carbohydrates). The cold weather enhancement provides an additional 1,200 calories.

Packaged Operational Rations

Packaged operational rations are prepackaged, precooked foods. They are used under operational conditions when other rations cannot be issued.

Meal, Ready-To-Eat

MREs are packaged meals designed for consumption either as individual units for a meal or in multiples of three as a complete day's ration. This ration is used to sustain individuals during operations that preclude organized food service facilities but where resupply is established or planned. When available, bread, fruit, and milk are recommended as enhancements to the MRE. There are currently 12 different menus in each box. The MRE also comes with the ration supplement, flameless heater (RSFH) included in each pouch. The ration has a shelf life of 3 years at 80 °F and 6 months at 100 °F. Each meal provides an average of 1,300 calories (15 percent protein, 36 percent fat, and 49 percent carbohydrates). When supplemented with bread, shelf-stable, an additional 200 calories are provided.

Ration, Cold Weather

The ration, cold weather (RCW) is specifically designed for cold weather activities. This ration is lighter and smaller than the MRE (based on three MREs versus one RCW). It provides an entree, snacks, and hot beverage mixes. Its components do not freeze. The unit of issue for requisitioning and reporting is one ration. One ration provides a complete daily nutritional requirement of 4,500 calories for one individual per day. The RCW is packaged in two plastic pouches with an issue ratio of one ration per individual per day. Currently under development is a meal, cold weather (MCW) that will replace the RCW. This will give commanders the flexibility to provide a mix of MREs, MCWs or other operational rations, dependent upon the mission.

Enhancements

Enhancements consist of items such as hot and cold beverages, soups, fresh fruits, and vegetables provided to enhance operational rations. Packaged operational rations (POR) enhancements are authorized for MREs and RCW, when they are the daily sole diet. The amount authorized per person is limited to 8 percent of the cost of the meal for POR enhancements. For all other operational rations (UBR, UGR-H&S, etc.), the amount is limited to 15 percent. Overseas exercises that must pay a higher cost for enhancement items are authorized an allowance not to exceed 25 percent of the cost of the unitized ration/meal. The 25 percent authorization is on an "as needed" basis only. As bread and milk are required to support UBR and UGR-H&S for nutritional adequacy and are not included in the unitized ration, the cost of these items will not be considered in computing the authorized enhancement cost.

Feeding Standard

On 21 June 1995, the Surgeon General released a revised policy on the use of the MRE as the sole source of subsistence. This revised policy allows MREs to be consumed as the sole source of subsistence for up to 21 days. The Marine Corps field feeding standard is based upon one MRE and two hot meals per day (a heated MRE does not comprise a hot meal). Ideally, breakfast and dinner should be hot meals, while an MRE is provided for the lunch meal. Mission permitting, hot meals will consist of a combination of UBR or UGR-H&S. Enhancements should be added to UBR and UGR-H&S to increase dietary fiber and troop acceptance. Enhancements, as detailed in the previous paragraph are issued when authorized to improve variety and acceptability of all rations. The inclusion of two A ration or UBR meals in the standard of three quality meals per day is based on units having the required personnel and equipment necessary for implementation. Commanders should not attempt to feed the A ration or UBR meals if sufficient personnel and equipment are not available.

The individual meal is best used when the levels of combat are intense or unit activity precludes the use of a prepared group ration. Marines conducting combat operations, (attack, raids, and ambushes) in fighting positions or widely dispersed at remote sites represent examples of the right time and place for using the individual meal.

The group meals (UBR and UGR-H&S) are best used when units are located in more stable or uncontested

regions on the battlefield or AO. Group meals can be prepared by the heat and serve method to full-scale, raw food preparation using a combination of UBR and enhancements. These meals require more time and resources to prepare and depend upon the logistical capability to deliver, prepare, and serve all components.

Patients in field hospitals will receive three hot medical B rations or A ration meals daily. MREs are authorized for patients only in emergency situations when other rations are not available. Perishable supplies will be added to the menu as they become available.

The hospital staff follows the theater ration policy unless the capability exists to feed those personnel at an improved standard. When supplies and other resources permit, hospital staff will be fed using the patient standard of three hot medical B ration or A ration meals per day.

CHAPTER 3. MCFFS EQUIPMENT

Individual Ration Heating Devices

There are two individual ration heating devices available for Marines to heat MRE entree packets or water for instant soups and beverages. These devices are the canteen cup stand and the RSFH.

Canteen Cup Stand

This is a reusable, lightweight, aluminum stand that fits over the standard canteen cup for travel. The stand allows the Marine to heat his MRE by immersing it in a canteen cup of hot water. The water is heated by the standard fuel bar, trioxane heat tablet or, if necessary, any other combustible material. The stand can also be used to heat water for soups or beverages.

Ration Supplement, Flameless Heater

The RSFH is a water-activated, exothermic, chemical heating pad. It is packaged with each MRE to provide Marines a means to heat the main entree items. It is listed in Federal Supply Catalog 8900-SL and may also be requisitioned (in bulk pack) separately. See chapter 6 for storage and issue procedures.

Tray Ration Heating System

The TRHS is comprised of a Tray Ration Heater (TRH) and associated collateral and support equipment that form a component of the MCFFS. When installed on an M998 HMMWV, the TRHS is a fully mobile system with heat-on-the-move capability to feed 250 UGR-H&S meals in remote areas or 500 meals in a ration day with replenishment. The system also supports non-mobile feeding requirements. The purpose of the TRHS is to bridge the gap from the use of MREs to the operational field mess. The TRHS consists of a stainless steel hot-water tank and a multifuel, airtronic burner that operates from an external fuel source (5-gallon can). The airtronic burner will operate for approximately 10 continuous hours on 5 gallons of fuel. A thermodisc maintains a water temperature between 180 °F and 200 °F. The TRHS will heat 18 tray packs to serving temperature in about 40 minutes. When installed on the HMMWV, the TRHS uses vehicular electrical power. If the TRHS is not HMMWV-mounted, it can be plugged into any 120 VAC, 60 hertz source. It is designed to operate effectively in cold weather down to -25 °F.

The TRHS can be fully installed on a HMMWV without material handling equipment. Easily installed, ratchet-operated tie down straps secure the TRHS as well as the collateral equipment. Each TRHS is equipped with support items including serving tables, serving utensils, insulated beverage containers, side-loading pan carriers, and a rain cover kit. The TRHS is capable of providing 500 meals to three or more sites within 1 day. This requires approximately 28 UGR-H&S modules. The contents of 16 UGR-H&S modules can be loaded into the HMMWV at the beginning of the day, and will require subsequent replenishment.

When the HMMWV arrives at the feeding location, serving tables and equipment are deployed, and a serving line is established. Hot tray packs are taken from the heater or side-loading pan carriers, opened, and served. Disposable plates and utensils, packaged in the unitized tray ration box, are used for cafeteria-style meals. There are currently 14 lunch/dinner and 7 breakfast modules used by the Marine Corps. The use of A ration enhancements is recommended whenever possible.

Field Mess Equipment

M2 Burner Unit

The M2 burner unit (see fig. 3-1, on page 3-2) is the heat source for the M59 field range, mobile kitchen trailer (MKT), and the filed sanitation center (FSC).

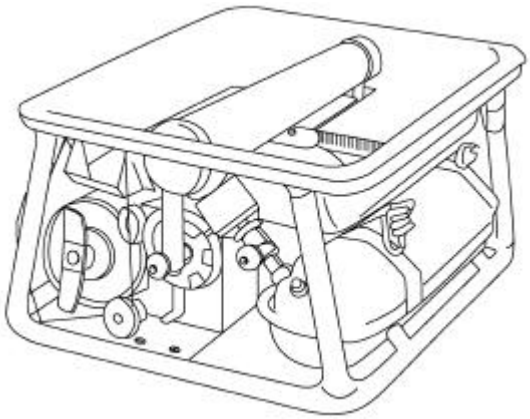

Figure 3-1. M2 Burner Unit.

The M2 burner unit has a U-shaped tank. For more information and operating instructions on the burner unit, see Technical Manual (TM) 10-7360-204-13&P, *The Range Outfit Field*. The mess chief must ensure that the cooks operate burner units safely and in a manner that protects the environment. They must be trained in fire prevention and control.

Fire Prevention and Environmental Protection

Ensure that all personnel follow these rules when operating the M2 burner unit:

- Make a firm, level, and well-drained foundation, free of combustible material, for the range.
- Ensure that the burner unit is at least 50 feet from any open flame before filling.
- Put the gasoline storage area 15 meters from the mess tent or MKT.
- Never pressurize the tank while the flame is burning or when the burner is hot, as escaping gasoline vapors will ignite.
- Wipe up spilled fuel on the burner unit. Vapors from spilled fuel can catch fire or explode if they contact the burner flame or heat from a hot burner.
- Do not permit fuel spills to absorb into the ground. Place contaminated dirt in plastic bags for retrograde and disposal.
- Do not operate the burner unit when the pressure gauge reaches or exceeds 25 pounds per square inch.
- Do not operate a burner unit with a pressure gauge that has not been equipped with the correct safety color code indicator (green 0-25, yellow 25-35, and red 35-60). Do not operate the M2 burner unit with a cracked or broken lens on the air pressure gauge.
- Do not tighten joints while the burner unit is in operation.
- Never put more than one burner unit in the M59 range.

Fire Fighting

Ensure that all personnel know what to do if an uncontrolled fire starts while using the M2 burner unit. When an uncontrolled fire starts—

- Try to close the flame valve. Once it is closed, pull the burner unit from the range cabinet. If the flame valve cannot be closed, use a fire extinguisher to put out the fire in the cabinet.
- Remove the burner unit from the kitchen after the fire is out.
- Release the air pressure from the fuel tank by loosening the fuel tank filler cap after the unit cools.

WARNING

Do not operate the burner in an unventilated space. Buildup of carbon monoxide gas could lead to injury or death.

M59 Field Range Outfit and Accessories

The M59 field range outfit (see fig. 3-2) is portable and can be adapted to many different cooking configurations. One field range outfit may be used to cook for up to 50 people. Field ranges can also be grouped together to cook for more than 50 people. Each field range comes with pots, pans, and cooking and serving utensils. One accessory kit is authorized for every one to four ranges (see fig. 3-3). For more information on the field range outfit and accessory kit, see TM 10-7360-204-13&P.

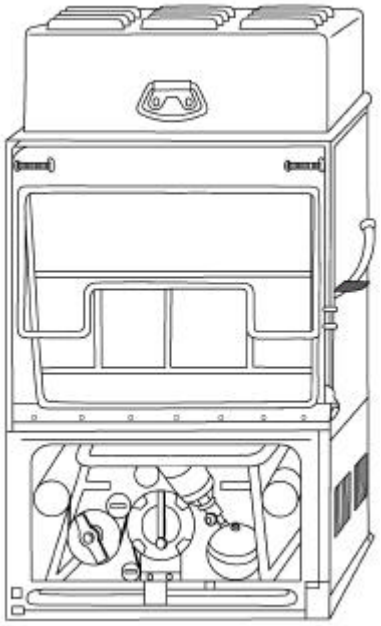

Figure 3-2. M59 Field Range Outfit.

The M59 field range can be used to bake, roast, boil, grill, and deep-fat fry foods by putting the burner unit in the correct position. The range may also be used as a hot line or steam table. The burner unit can be used in either the top or bottom position. Figure 3-4, on page 3-4, shows the field range with the burner unit in the top position.

When the burner unit is used in the top position, slide shutters on the field range cabinet are opened. When the unit is in the bottom position, the slide shutters on the field range cabinet are closed. Figure 3-5, on page 3-4, shows the field range with the burner unit in the bottom position.

WARNING

Before placing a burner unit in either position, check to be sure that the other position is empty. Operating a field range with two burner units could lead to injury or death.

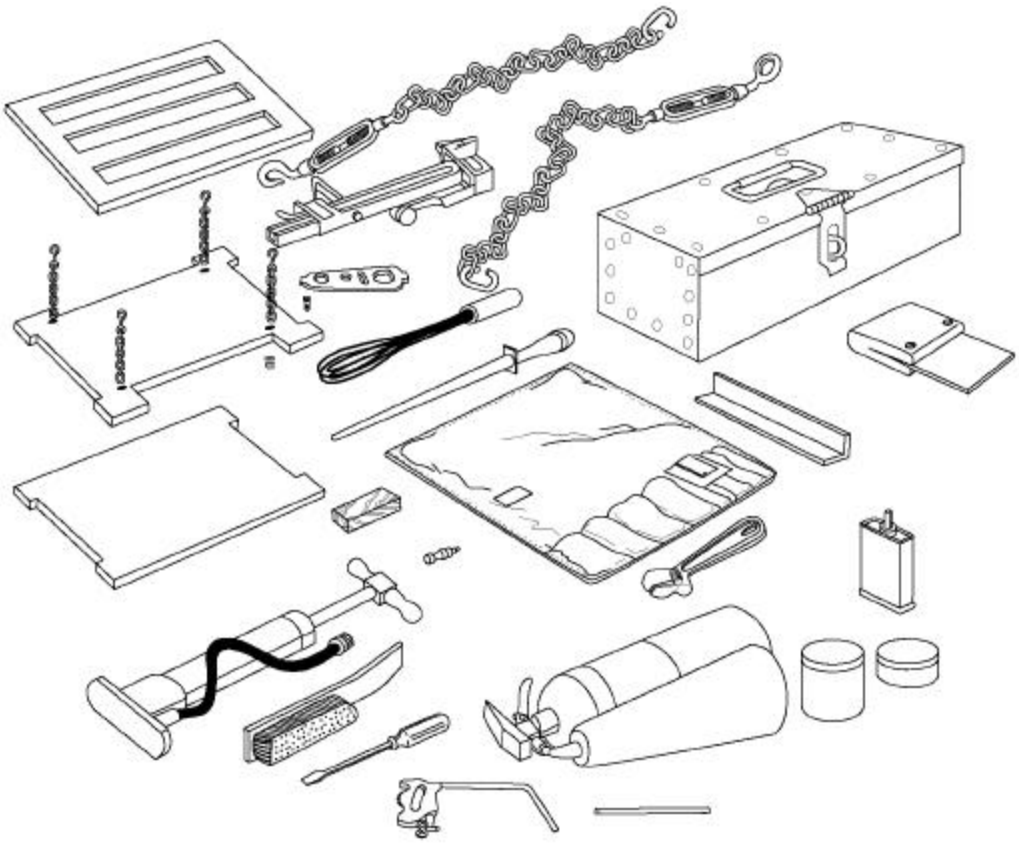

Figure 3-3. M59 Field Range Accessory Kit.

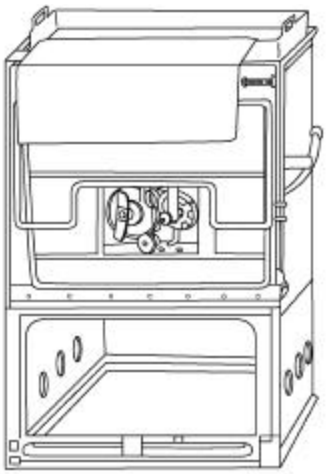

Figure 3-4. Field Range with Burner in Top Position.

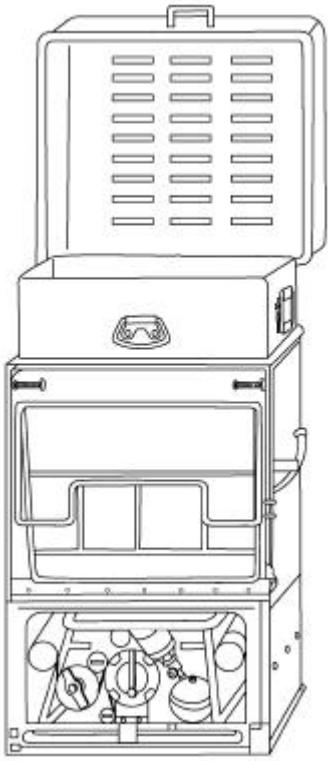

Figure 3-5. Field Range with Burner in Bottom Position

Immersion Burners

Immersion burners are used to heat water for clean-up operations at the field mess. Two types of immersion burners are the preway model and the standard model (see fig. 3-6). The models look alike, with the main difference being the two column stacks on the heater body. Operating instructions are on the data plate attached to the burner unit cover. Additionally, TM 5-4540-202-12&P, *Immerging Water Heater*, and TM 10-4500-200-13, *Operator's Organizational and Direct Support Maintenance Manual (Including Repairs and Special Tools List) for Heaters, Space: Radiant Type, Portable*, discuss the immersion burner in detail. The Marine Corps is considering replacing the immersion burner (and mess kit laundry lines) with the deployment of the field sanitation unit (FSU). This conversion will depend upon funding.

Insulated Food Containers

Insulated food containers (see fig. 3-7) are used to keep hot foods hot and cold foods cold. Each container has three aluminum inserts with tight-fitting covers. Each insert may be filled to 5 2/3 quart. Hot and cold food must be stored in separate containers.

Heating and Filling

A properly heated container will keep food warm for 3 to 5 hours. However, Navy Medical (NAVMED) P5010, *Food Service Sanitation*, states that potentially hazardous foods (PHF) held in an insulated food container for more than 4 hours must be discarded. Before hot food can be placed in the container, the following procedure is performed:

- Remove the inserts.
- Pour 2 quarts of boiling water into the container.
- Replace the inserts.

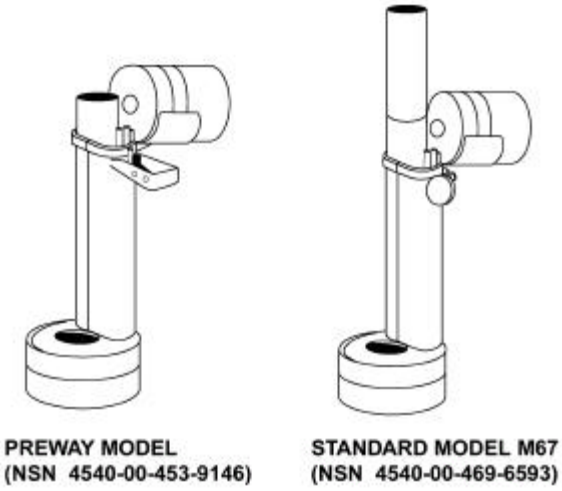

Figure 3-6. Immersion Burners.

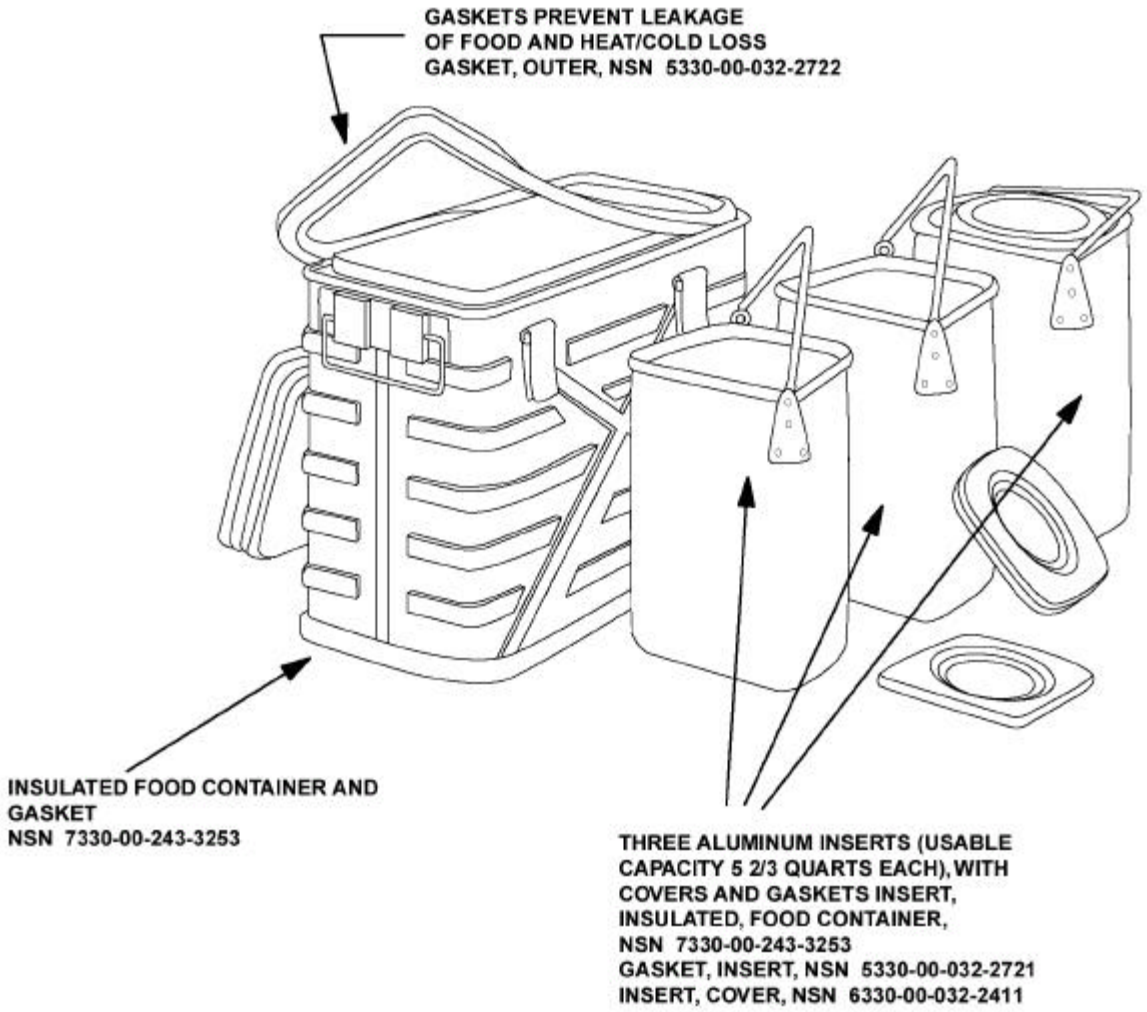

Figure 3-7. Insulated Food Containers with Part NSNs.

- Close the container lid and secure the latches diagonally.
- Let stand for at least 30 minutes.
- Open and remove the inserts.
- Pour water from the container.
- Put hot food in the insert and replace the insert cover (with gasket).
- Place the filled inserts in the container.
- Close and fasten the container lid by securing the latches diagonally.

Chilling and Filling

Before cold food can be placed in the container, the following procedure is performed:

- Remove the inserts.
- Put crushed ice or 2 quarts of ice water in the container.
- Close the container lid and secure the latches.
- Let stand for 30 minutes.
- Pour ice or water from the container.
- Put food in the inserts and fasten the lids.
- Place the filled inserts in the container.
- Close and fasten the container lid by securing the latches diagonally.

Labeling Containers

When filled, each food container is labeled by placing a strip of masking tape across the top of the container

lid, and writing the menu item, the number of servings, the date, the time the item was placed in the container, and "Consume by _____ or Discard" (fill in the time; 4 hours after the container was filled) on the tape. The NSNs for the labels on the top of the insulated food container are 7690-01-224-6411, 7690-01-220-3274 or 7690-01-223-2521.

Transporting Food

If the food is to be transported, a code letter or color is used to identify each site; each site must have a complete menu. The menu items, the number of servings, the date and time prepared, "Consume by _____ or Discard," and the site code are written on each container label. For small unit feeding, separate inserts for meat, a starch, and a vegetable are placed in one insulated food container.

Cleaning the Container

The insulated food container and the inserts are cleaned before and after every use. The food container is never immersed in water. The inserts and gaskets are removed and washed in hot, hand-dishwashing compound solution, then the parts are rinsed and sanitized in water at 180 °F or greater. After washing the gaskets from the food container, they are replaced with the flat sides down and allowed to dry. The gaskets from the insert covers are replaced on the insert covers and allowed to dry.

Ordering Replacement Parts

Replacement parts for the insulated food container can be ordered through normal supply channels. Figure 3-7 gives the NSN and nomenclature for each part.

Storing the Container

Containers are stored with lids closed but unlatched. The food container lid is pushed back slightly to allow air to circulate and reduce mold or mildew.

Dispenser, Liquid, Insulated

The dispenser, liquid, insulated, with spare parts and their NSNs are shown in figure 3-8. Procedures for the insulated food container are followed.

Generator, Diesel Engine, Skid-Mounted, Mobile Electric Power

TAMCN B08917B, NSN 6115-00-465-1030, Model MEP-003A

The MEP-003A is a 10-kilowatt, 60-hertz generator set consisting of a revolving field alternator powered by an air-cooled diesel engine. A mechanical governor keeps the engine speed at 1,800 revolutions per minute. It requires a military occupational specialty (MOS) specialist to set up, start, and maintain this generator. This generator and/or the MEP-006 Totally Quiet Generator are key elements of the field mess, and planning guidance should be addressed with utilities personnel prior to the set up of any field mess.

Reverse Osmosis Water Purification Unit

TAMCN B26047B, NSN 4610-01-295-2719

The reverse osmosis water purification unit (ROWPU) is a 600-gallon-per-hour, frame-mounted, mobile, forklift-moveable, water purification system. The power source for the ROWPU is a 30-kilowatt diesel generator. The primary purpose of this unit is to provide pure or potable water from any raw water source. Flow systems within the ROWPU process raw water to make it drinkable. Special pumps, controlled by a built-in control panel, move the water through the unit to process as much as 10 gallons of potable drinking water per minute. The ROWPU can be transported by air, land, rail or road. The ROWPU should be considered when sustainment feeding is desired and/or water resupply is not practical and a river, lake or sea may be drawn from. It requires an MOS specialist to setup, operate, and maintain this unit and his guidance will be vital at your initial planning conference.

M-80 Water Heater

The M-80 water heater is maintained, set up, and operated by MOS-specific personnel. It provides many units within the Marine Corps with hot water for potshacks, but is only used if the unit has them organic to its T/E.

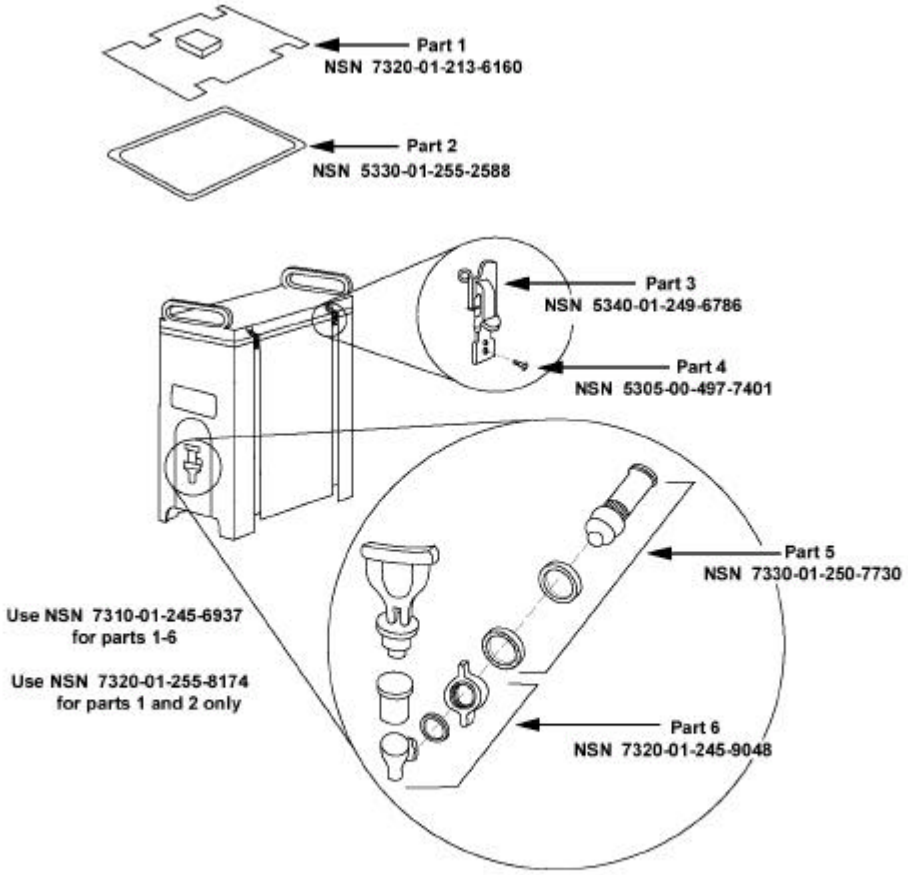

Figure 3-8. Dispenser, Liquid, Insulated.

To set up the water heater—

- Turn the load limit switch off on the water heater.
- Open the water release valve until a steady stream of water flows from the vent drainpipe. Close the valve.
- Close the fuel shutoff valve.
- Remove the priming plug and prime the fuel pump by pouring fuel into the line.
- Open the air shutter halfway.
- Open the door to the control panel and press the FLAME SAFEGUARD rest button.
- Place the load limit switch to the ON position. [**Note**: The water heater is equipped with an ultraviolet scanner and a flame safeguard control unit to purge any fumes or vapor from the combustion chamber prior to ignition. The control unit will also cause a safety shutdown, if the burner does not ignite within a preset time.]
- Reset the flame safeguard control unit if a safety shutdown occurs [**Note**: By limiting the time to 15 seconds or less, the pump can be primed without a safety shutdown].
- Check the fuel pressure gauge for a minimum reading of 80 pounds per square inch (psi). If the pressure does not read 80 psi within 15 seconds, place the load limit switch in the off position.
- Wait for approximately 15 seconds and open the door to the control panel and press the FLAME SAFEGAURD rest button and place the load limit switch to the ON position until a minimum gauge reading of 80 psi is reached.
- Adjust the fuel pump if 80 psi cannot be reached.
- Set the water temperature control to the desired setting.
- Close the control panel door.

To operate the water heater—

- Open the fuel shutoff valve. The burner should ignite within 20 seconds. If the heater burner does not ignite within specified time, shut the unit down.
- Adjust the air shutter until there is little or no smoke in the heater exhaust. When the heater temperature limit is reached, the heater will shut off automatically, and the fuel pressure gauge will register zero.
- Open the water outlet valve.

Refrigerated Container, Field, 8 by 8 by 10 Feet

TAMCN B1710, NSN 4110-01-107-9078. TM 08407A-13/1, *Refrigeration Container Field*.

The refrigerated container is an insulated 350 cubic foot (ft^3) capacity container without a refrigeration unit (see fig. 3-9). The overall refrigerated container assembly is a one-piece, welded-steel frame with permanently assembled, riveted-aluminum alloy panels. It contains—

- Sixteen 18- by 42-inch wire shelves. Two sets of four shelves are arranged against the right interior wall, and two sets are arranged against the left wall.

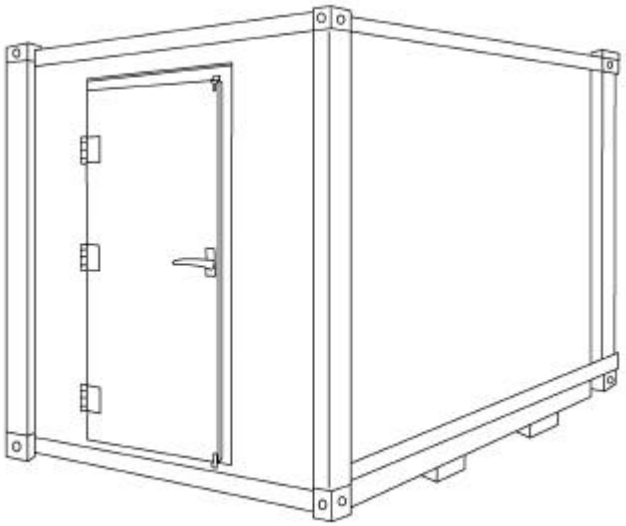

Figure 3-9. Refrigerated Container, Field.

- Four tie-down rings are mounted on the interior left and right walls to aid in securing items.
- Two drains are provided in the floor of the container.
- A thermometer is mounted on the exterior front panel near the left side of the door assembly.
- A lightbulb switch is mounted on the exterior front panel that controls a 100-watt incandescent bulb in the container. The switch includes an incandescent light.

The container may be lifted by crane or forklift. It should be placed on a flat level surface or platform capable of withstanding 250 pounds per square foot. It is advisable to pick a shaded area to increase the efficiency of the refrigerator. The ERU-4E is the refrigeration unit that will fit into the cavity on the back wall of the container. A 115-volt, 60-hertz, three-wire cable is required (provided by the user) to power the receptacle on the back wall of the container for the lighting circuit. This unit is usually located with the engineers or utility personnel of a unit and is task-organized when needed.

Refrigeration Unit for Rigid Box, 4,000 BTU, Model ERU-4E

TAMCN B1645, NSN 4110-01-152-1946.

This unit must be operated by MOS-accredited personnel. Food service personnel will ensure temperatures are monitored and recorded in accordance with the NAVMED P5010. Characteristics, capabilities, and features are as follows:

- Provides refrigerated or heated air for an enclosed space.
- Maintains temperature of enclosure at any setting between 0 °F and 40 °F, in ambients of -25 °F to 110 °F.
- May be mounted in any 8- by 8- by 10-feet field container.
- Weighs 600 pounds and designed to be highly portable and easily installed. [**Note**: Newer versions of the ERU are equipped with forklift cavities.]
- Electric, motor-driven, and requires a 120/208-volt, 60-hertz, three-phase, three-wire power supply.

- Uses R-12 as its refrigerant and requires a minimum charge of 8 pounds and a maximum charge of 10 pounds.
- Equipped with an automatic defrost cycle to prevent excessive buildup of frost and ice on the evaporator coil.

Lightweight Camouflage Screen and Support Systems

TM 5-1080-200-13&P, *Maintenance Manual for LTWT Camouflage Screen Support System*

The camouflage screen and support system is a modular system consisting of a hexagon-shaped screen, a diamond-shaped screen, a support system, and a repair kit. The screens are made of synthetic, lightweight, water-resistant material. Any number of screens can be joined to cover an area. Almost every unit supply in the Marine Corps has these systems organic to them. The screens are fastened together with a quick connect/disconnect system to facilitate the joining or separation of screens. The woodland and snow scenes come in seasonal patterns. One side has a spring/summer pattern, the other side has a fall/winter pattern. The desert screen has arid and semi-arid sides. The support system consists of—

- Twelve, 4-foot aluminum pole sections that can be extended to various heights.
- Eighteen aluminum stakes.
- Eighteen batten spreaders that support the screens.
- Support system carrying case.
- Repair kit containing enough material for users to perform repairs on the screens.
- Separate cases for the screen system and support system.

The camouflage screen system is used to conceal stationary target signatures, weapons, vehicles, and semi-permanent positions in situations where natural cover and/or concealment may be absent or inadequate.

Tent, General Purpose, Medium

TM 10-8340-211-13, *Maintenance Manual for Tent General Purpose*, NSN 8340-00-482-3963

The outer fabric or skin of each tent is a one-piece, preformed body, manufactured from 9.85-ounce duck material, treated for fire, water, weather, and mildew resistance. The tent is designed for use in tropical or temperate zones. The installation of a liner and stove makes general purpose (GP) tents effective in colder climates. Liners are not issued with the tents but may be requisitioned separately. The GP tent is rectangular, hip-roofed, and supported by joined-wood center poles, a joined-wood ridgepole with solid-wood eaves, and door poles. The tent has two doors, one on each end, and can be used for a messhall, storage spaces or troop quarters.

Tent Dimensions

- Length: 32 feet by 8 inches.
- Width: 16 feet
- Floorspace: 512 square foot (ft^2).
- Weight: 534 pounds.
- Cube: 33 ft^3.

Tent Erection Procedures

- Unpack tent and perform preventative checks in accordance with the TM 10-8340-211-13.
- Study the ground plan carefully for placement of poles and pins.
- Ensure corners are square and drawn tight.
- Drive a 16-inch footstop pin, straight up and down, at each corner and attach endwall and sidewall corner footstop to pins.
- Use a 5-foot 8-inch eave pole as a measure to place pins equidistant from sidewall, according to ground plan; mark and drive 24-inch wood pins; then attach side, corner, and door eave guy lines to pins.
- Insert spindles of 5-foot 8-inch eave poles in grommets at eave and corner. Insert 6-foot 2-inch door poles in grommets of front and rear doors.
- Raise tent walls by raising all eave, corner, and door poles to a vertical position. Then, tighten all guy lines just enough to keep poles and sidewalls upright.
- Assemble the two joined center poles and the joined ridgepole, then from inside the tent, position them with the spindles of center poles through ridgepole plates and grommets in roof.

- Raise each pole to a vertical position, with one man on each pole, then tighten the guy lines.
- Assure that all guy lines are attached from outside the tent to pins and tightened, and all footstops are attached.
- Adjust ventilation flaps and tie them off to eave poles.
- Fasten tie tapes at inside corners of tent around corner eave poles.

Equipment from Other Services

Equipment from other Services, primarily the Army, is sometimes available for use on a temp-loan basis. An example is the Marine Corps' use of the Army's MKT in Southwest Asia. Additionally, many units employ a homemade version of the FSC, rather than use immersion heaters.

Field Sanitation Center

The FSC (see fig. 3-10) consists of equipment required to clean and sanitize the food service equipment.

The equipment for the FSC, which includes the Temper tent (NSN 7360-01-277-2558), is—

- Three field sinks and three sink covers.

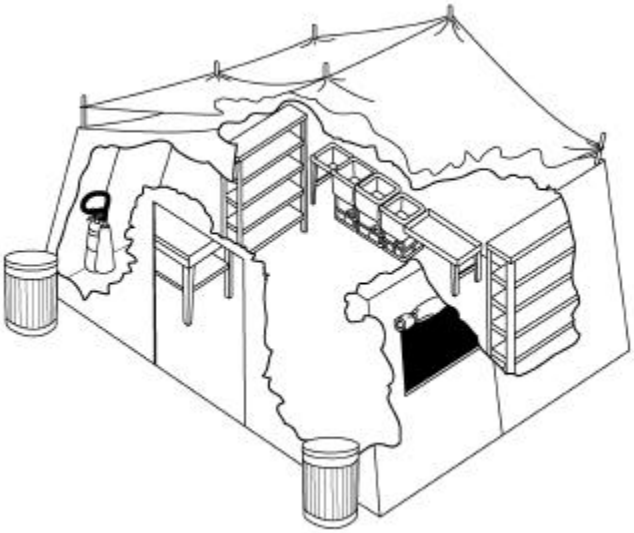

Figure 3-10. Field Sanitation Center.

- Two drain tables.
- One worktable.
- Two storage racks.
- Three burner units.
- One tent, extendable, modular, utility (16 by 20 feet).
- One gasoline lantern.
- One 50-foot drain hose assembly.
- One fire extinguisher.
- Three thermometers for the sink and three brackets for the thermometers.
- Two plastic trash barrels.
- Two sink immersion racks.
- Two sink adapters (to connect sinks at the top).

Equipment is assembled as described in the following paragraphs.

Sink Assembly

The sinks come complete with two racks inside each sink (a burner rack for the M2 burner and a rack base). (See figs. 3-11 and 3-12 for sink assembly.)

Worktable

The worktable is assembled and placed adjacent to the three sinks.

Storage Rack Assembly

The storage rack is assembled and placed in a convenient area of the tent.

Trash Cans

The two, 32-gallon capacity plastic trashcans are placed just inside or outside of the tent entrance. One can is used for food waste (plate scraping, leftovers, and vegetable culling), and the other is for nonfood waste (cans, bottles, boxes, and paperware).

Mobile Kitchen Trailer

The MKT is a complete kitchen unit, mounted on a trailer chassis that can be towed by a medium tactical truck (M923 or similar). The MKT is also certified for helicopter external air transport. Currently, there are

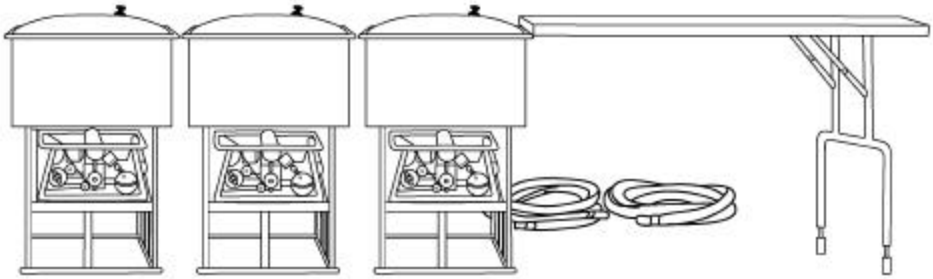

1. TAKE OUT THE FIRST RACK FOR THE M2 BURNER.
2. TAKE OUT THE RACK BASE. INVERT IT, AND USE IT AS A FOUNDATION.
3. SET THE M2 BURNER RACK ON THE RACK BASE.
4. CENTER THE SINK ON TOP OF THE M2 BURNER BACK, WITH THE DRAIN ASSEMBLY TO THE REAR.
5. REPEAT STEPS 1 THROUGH 4 WTH THE REMAINING TWO SINKS.
6. PLACE THE THREE SINKS NEXT TO EACH OTHER BY THE WINDOW AT THE REAR OR LEFT SIDE OF THE TENT. ATTACH THE SINKS TOGETHER WITH SINK ADAPTERS. ATTACH THE DRAIN TABLE TO THE SIDE OF THE TWO END SINKS. THE TWO DRAIN TABLES WILL HOOK ONTO THE TOP EDGE OF THE SINK. ADJUST THE FOLD-OUT LEGS FOR BALANCE. ATTACH THERMOMETERS AND THERMOMETER BRACKETS TO EACH SINK.
7. ATTACH THE DRAIN HOSE ASSEMBLY TO THE REAR OF EACH SINK THEN ATTACH THE 50-FOOT LENGTH OF DRAIN HOSE TO THE DRAIN HOSE ASSEMBLY, AND EXTEND IT TO THE PROPER LOCATION.
8. CLOSE THE SINK DRAINS.

Figure 3-11. Sink Assembly.

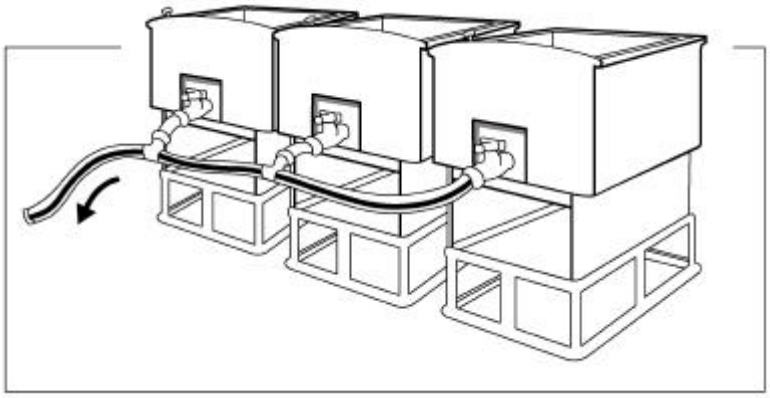

Figure 3-12. Drain Hose Assembly.

five models of the MKT in use: MKT-75, MKT-75A, MKT-82, MKT-85, and MKT-90. The MKT-90 has sling-load capability. Chapter 10 of TM 10-7360-206-23&P, *Unit and Direct Support Maintenance Repair Parts and Special Tools List for Kitchen Field, Trailer Mounted Model MKT-75*, discusses the components of the MKT, their use, and maintenance procedures.

The MKT is covered by a metal roof that can be lowered, for storage or transport, or raised, when food is prepared and served. After the roof has been raised, mosquito netting may be attached to keep insects out. Also, the kitchen has detachable fabric sides to protect troops from inclement weather.

Figure 3-13 shows the MKT setup in different environments. Figure 3-14 shows the MKT in its three configurations.

Meal Service

One MKT can prepare and serve unitized rations for up to 300 Marines per meal. Two trailers may be hooked up in tandem to prepare and serve up to 700 meals at consolidated field mess sites.

Packing Process

After meals have been served, the kitchen can be packed up into the travel mode. The packing process is very important; if not properly packed, the trailer can be permanently damaged.

It is imperative to train Marines to pack the MKT according to TM 10-7360-206-13, *Maintenance Manual for Field Kitchen Trailer Mounted.*

Operation During Inclement Weather

Fabric curtains are provided with the MKT to use in inclement weather. To prepare the MKT for operation during cold or inclement weather—

- Close air vents partially to prevent entry of outside elements.
- Remove six fabric curtains from storage.
- Install the longest curtains on the sides and fasten them to the roof fabric flap.
- Install the two smallest curtains on the right side of the roof fabric flap (both ends).

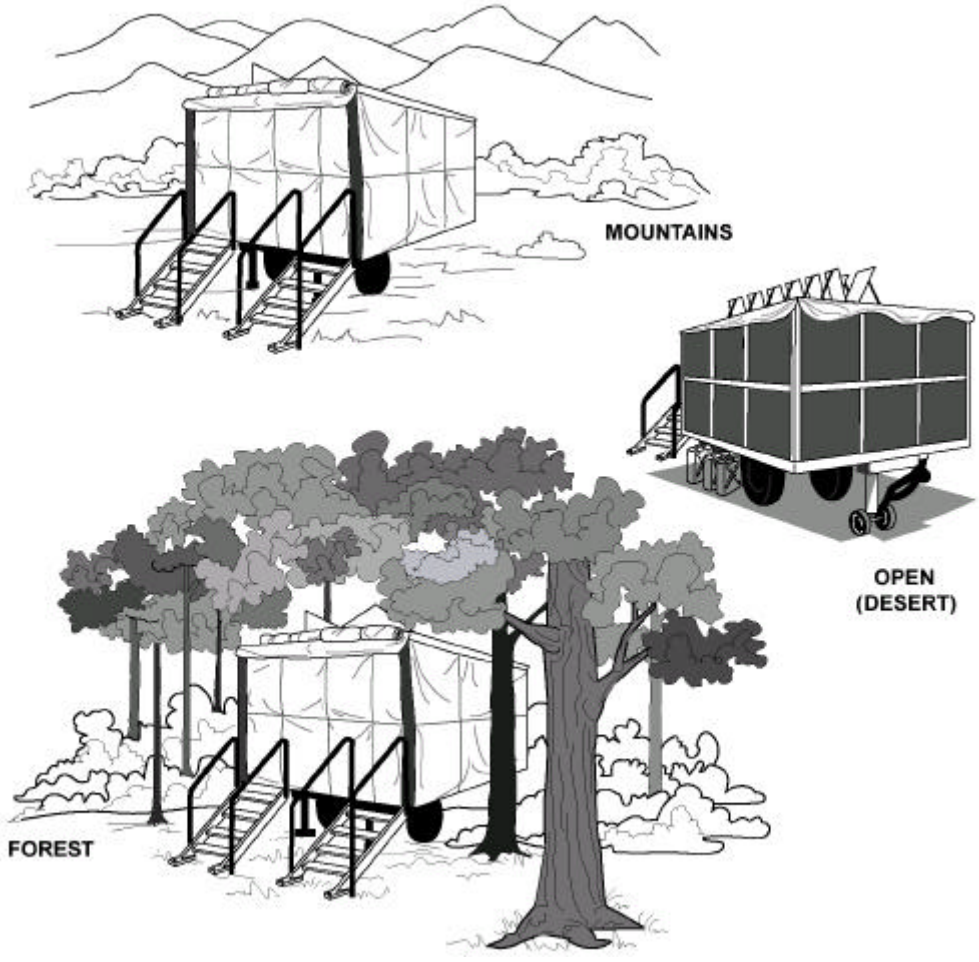

Figure 3-13. MKT in Various Configurations.

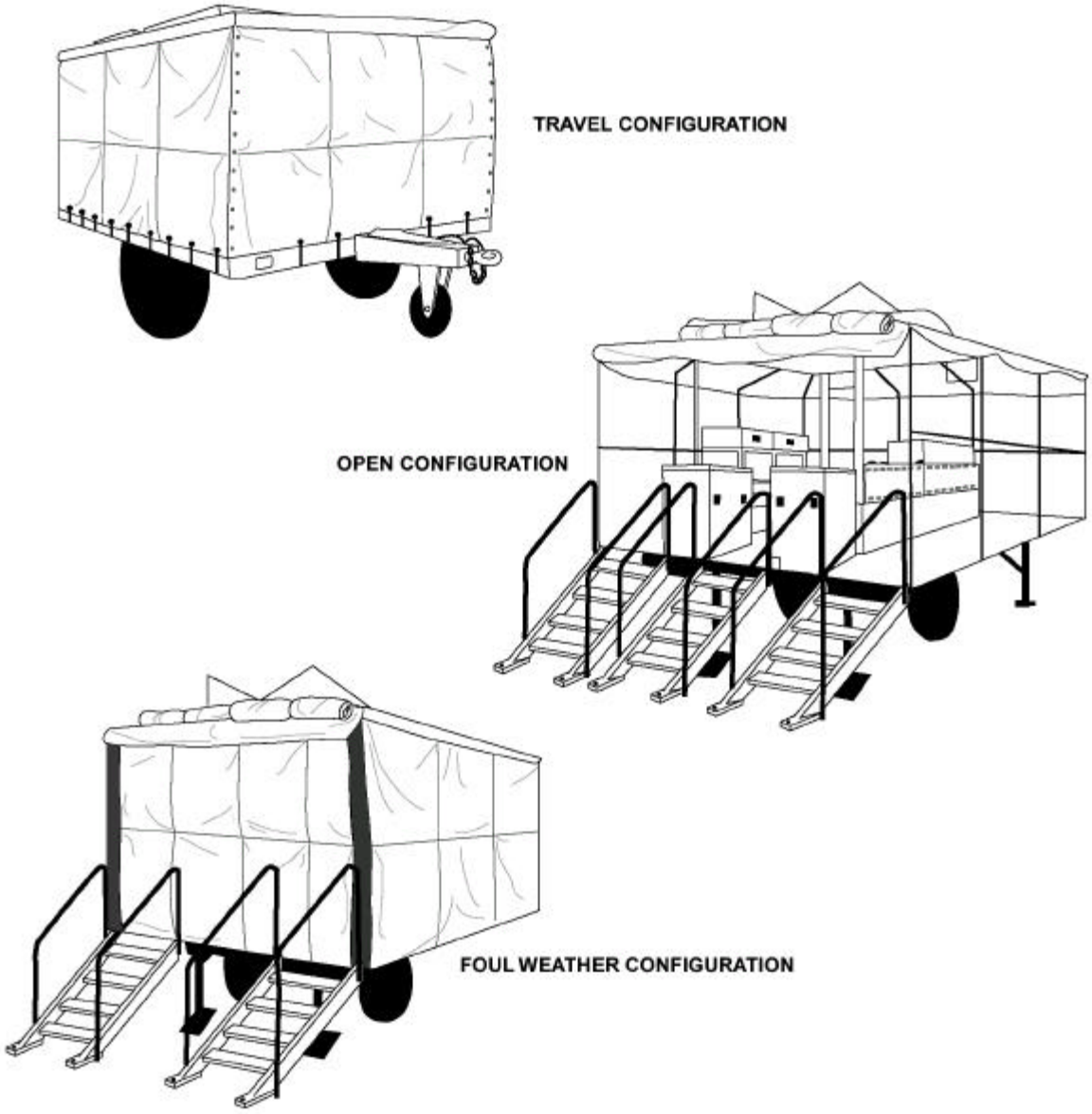

Figure 3-14. Various Configurations of the MKT.

- Install the two remaining curtains.
- Secure the bottom edge of the curtains to the ramps with rope tie-downs.
- Open and close kitchen exits with hook-pile tabs.
- Secure all ties around the tent poles rails, except at the entrances and exits.

Operation in High Winds

Hold-down ropes are installed from the tent pole tops to the ground for added support.

Future Equipment

A containerized kitchen is being designed to provide a rapidly deployable kitchen, equipped to offer fast, efficient, safe, reliable, and quality feeding of forces. It will have the following characteristics:

- Serves 650 to 1,000 hot meals at least twice a day (manned by six food service Marines).
- A 3 to 1 expandable International Organization for Standardization (ISO) container (8 by 8 by 20 feet).

- Thermal fluid space heating.
- 15-kilowatt generator or shore-power capability.
- C-130 transportable.
- Modular appliance technology central heating.
- Portable and fixed water source connections.
- Expandable to operational configuration in 1 hour.
- Food storage and preparation capability.
- Hot water for cleaning and food rinsing.

Each unit will be fully equipped and capable to provide meals within 3 to 4 hours (1 hour setup, 2 to 3 hours preparation). The containerized kitchen will not provide shelter or seating for patrons. Sanitation capabilities (dishwashing) are not proportionate to the feeding capabilities, therefore deployment of the FSU is required at a ratio of two FSUs for every containerized kitchen.

CHAPTER 4. DEPLOYMENT PLANNING

Theater Activation

Deployment planning begins with forecasting requirements. Food service planning in hostile environments must be tailored to support the tactical situation along the entire operational continuum. It must maintain a high level of satisfaction for Marines subsisting in the field, in turn, increasing their morale. Commanders, operations officers, logistics personnel, food service officers, and food service technicians must determine the requirements that will satisfy the feeding plan in the deployment planning process. Mission-specific requirements must be identified early in the process.

Commanders, operations planners, logisticians, and food service officers must determine Class I requirements that will satisfy tactical needs in the deployment planning process. When a theater is initially activated or if hostilities break out, all components of the Class I distribution system may not be in place. Units may not have the luxury of choosing which ration they will consume. The OPLAN and the approved feeding plan will identify when distribution units and equipment will become operational and when the full family of rations will be available for issue.

To establish Class I support in theater, units deploy with a basic load of MRE. Then, the TRHS should be implemented in the feeding plan as soon as possible and, depending on the length of operation, be used as a bridge to serving unitized rations.

Additional factors included in operational planning are environmental protection, water, fuel, ice, waste disposal, subsistence inspections, and residuals. Often, all of the planning information does not get to the actual operators, the food service Marines. Marine Corps Forces, Pacific (MARFORPAC) Order P10110.2/ Marine Corps Forces, Atlantic (MARFORLANT) Order P10110.2, *SOP for Food Service*, is an excellent resource guide for food service Marines and supporting command elements in the planning and operating stages of expeditionary feeding. The checklist in appendix A should be used for deployment planning.

Host-Nation Feeding

One of the planning factors to consider is host-nation feeding. Host-nation feeding consists of two categories: host-nation support (HNS) and host-nation messing (HNM). On rare occasions, the use contractor feeding may also be necessary.

Host-Nation Support

An HNS agreement may be entered into by the U.S. government and friendly host nations. There are two types of HNS agreements: wartime and peacetime. Food service HNS consists of selected subsistence items procured from the local economy and prepared by Marine Corps food service personnel. Generally, items consist of produce, milk, bread, and meat that are used to augment/enhance unitized rations. If a unit anticipates the need for HNS, it must notify the appropriate headquarters to ensure that a current agreement is in effect. The applicable HNS agreement letter that specifies support and reimbursement must be submitted with the unit's Quarterly Subsistence Financial Report (QSFR). The unit receiving HNS must ensure all billing documents are retrieved prior to departing the host nation. All subsistence provided by a host nation must be inspected by U.S. Army veterinary personnel.

Host-Nation Messing

HNM involves Marine Corps personnel subsisting in a host-nation facility in which the Marine Corps will reimburse the host nation for the meals provided. HNM differs from HNS in that the Marines actually receive full messing support in a foreign military or civilian dining establishment and, in most cases, no food service Marines or attendants are needed. Units requiring HNM must identify the requirement 90 days prior to the support being provided. Procedures necessary for obtaining billing documents must be coordinated with the host nation early in the planning process to ensure that all paperwork is compiled in a timely manner at the end of the operation or exercise.

Contract Feeding

At times, units will operate in areas where a civilian contractor provides meals. This method of feeding Marines should be used only when all efforts to obtain subsistence support from other military/host-nation sources have been exhausted. An authorized U.S. federal contracting agent, usually at a military installation or embassy nearest the feeding site, must negotiate contract-feeding requirements. All non-food costs incurred by the contractor (labor, equipment, materials, etc.) must be paid for with unit operation and maintenance Marine Corps funds, thus this type of feeding is the least desirable. It is the responsibility of the subsisting unit to collect all accounting data pertaining to the subsistence operation prior to departing the AO.

Unit Preparation

Manpower Requirements

Actual staffing of food service Marines and attendants is related to the type of operation, feeding plan, and ration established. There is no current directive that dictates required ratios of food service Marines and attendants per personnel fed. Ratios that have generally been supported follow.

[**Note**: when any decrease in support personnel is implemented, the workload will increase and may have an adverse affect on supporting the Marine in the field.]

Field Feeding Operations

- **Food Service Marines**—1 per 50–75 personnel to be fed, in addition to two staff noncommissioned officers (SNCOs) (mess manager and assistant).
- **Mess Attendants**—1 per 25 personnel to be fed.
- **TRHS Operations**—three food service Marines and one driver per TRHS.

Shipboard Feeding

The Navy generally requires 1 food service Marine per every 50 Marines aboard ship. The amount of mess attendants can vary from 1 food service Marine per 25 Marines, to 1 food service Marine per 50 Marines, depending on the ratio of ship's company to embarked Marines.

The field feeding operations ratios should be adhered to as closely as the mission allows.

Equipment Requirements

Equipment requirements are largely determined by the amount of personnel supported (see table 4-1).

Table 4-1. Equipment Requirements.

	Ratio	
Nomenclature	**Equipment (per person)**	**Personnel**
Food Containers	1	25
Range Outfits w/ M-2	1	50
Accessory Outfits	1	(per 2 range outfits)
Vacuum Jugs (3 gal)	1	25
Container, Beverage, 5 gal	1	25
Tents G/P Medium	4	500
ERU 4-E W/ 350 cu ft Refrigerator	2	500
Water Trailer, 400 gal	1	250
Generator MEP-3 (24 hr operation)	2	1,500
TRHS	1	250

The repair or replacement of T/E gear (Class IX) is determined by the age of the equipment, hours of operation, handling during transportation, and how well the maintenance program has been performed. Table 4-2 contains the life expectancy of field equipment.

Table 4-2. Average Life Expectancy of Field Equipment.

Equipment	Average Life Expectancy
M-59 Range Cabinet	Indefinite
M-2A Burner	10 years
Generator for M-2A	450-500 operating hours
Immersion Water Heater	10 years
Food Container	5 years
Vacuum Jug*	5 years
* Currently, all 3-gallon vacuum jugs are being replaced on a 2 (vacuum jugs) for 1 (5-gallon Cambro Beverage container) basis.	

Fuel Requirements

See table 4-3 for fuel requirements.

Table 4-3. Fuel Requirements.

Nomenclature	Capacity (gallons)	Time (hours)	Primary Fuel	Alternative Fuel*
M-2 Burner	2	4	Gasoline	DF-1, DF-2, DFA, JP-8
Tray Ration Heater	5	10	Diesel	Kerosene
*The use of alternative fuels will usually result in increased lighting difficulties, decreased efficiency, more frequent adjustments to the fuel flow rate, increased smoke output, and shorter intervals between scheduled cleaning.				

To feed 700 Marines for 7 days (two UBR meals and one UGR-H&S meal per day) the amount of fuel is determined by using the following guidelines.

M-2 Burner: 1 per 50 troops.

700 Marines divided by 50 = 14 M-2 burners.

14 M-2 burners x 2 gallons = 28 gallons per meal.

28 gallons x 14 meals = 392 gallons.

TRHS: 1 per 250.

700 divided by 250 troops (per 90 minutes) = 2.8 x 90 = 252 minutes.

252 minutes divided 60 = 4.2 hours.

4.2 hours x 7 meals = 29.4 (30) hours.

5 gallons of fuel will burn continuously for approximately 10 hours.

30 divided by 10 = 3 (5 gallons of fuel) or 15 gallons. The 15 gallons of fuel will support 30 hours of continuous burning. The TRHS will automatically shut off and turn on when the switch is placed on automatic, allowing for more than 10 hours of use. The estimated 90 minutes per 250 servings is based on using multiple feeding sites.

Class IX Requirements

Unless directed by message or the letter of instruction (LOI) to keep a specified amount of Class IX on hand for a pre-expendable bin (PEB), a general rule of thumb is to compute 10 percent of the above mentioned items for every 30 days of operation. Although this is a rule of thumb, special consideration must be given to the type of environment the equipment will be operating in. Table 4-4 contains items requiring consideration for a PEB.

Table 4-4. Items Requiring Consideration for a PEB.

Type of Equipment	Class IX
Immersion water heater	Wicks and retaining rings
Food containers	Container gaskets Insert gaskets
Ranges/M-2A burners	Generators Preheaters Air input valves Drain plugs Retaining springs Air pressure gauges
Accessory outfits	Air pumps
Vacuum jugs	Cover gaskets Faucet assembles/gaskets

Water Requirements

The water capacity of the TRHS when empty is 30 gallons. When tray packs are inside the TRHS, the approximate amount of water required for proper heating is 10 gallons.

When using the UBR, an average of 75 gallons of water per day is required to prepare food and beverages for 100 people.

Security

Procedures for securing subsistence, supplies, funds, and equipment must be established in advance and include requirements for special items such as concertina wire or locks, and duties of guard personnel patrolling subsistence and supply stocks.

Records and Logs

Food service personnel should maintain records and logs that reflect unit activities that may impact future missions. Records of training, equipment (maintenance and replacement), ration accounting, personnel supported (feeder unit versus one being subsisted by another), and problems encountered and solutions used should be recorded.

Equipment Status

The status of equipment should be determined prior to notification of an operation or deployment. All required replacement parts and equipment are ordered as the need is identified. When funds are not available, a list of equipment requirements is prepared and completed requisitions are maintained for immediate submission when the unit is notified of fund availability or impending deployment.

Training

Personnel must be trained to operate effectively within the MCFFS. Training should be aimed at the individual's job requirements, level of responsibility, and team building. Training should include a working knowledge of the operation and maintenance of T/E equipment, subsistence requisitioning, receipt and storage of subsistence, accountability, issue and distribution procedures, safe food handling, preparation and serving, environmental stewardship responsibilities, sanitation procedures, and retrograde operations.

Supply Levels

Push System

A push system is used to initially fill the supply pipeline during conflict. During limited duration or high-intensity conflict, the push system may be used exclusively without conversion to the pull system. Under a push system, the materiel management center (MMC) and/or the planning cell determine the type and quantities of rations to be shipped to each Class I supply point. Types and quantities of rations ordered and shipped under the push system are based on anticipated troop strength, unit locations, type of operation, and feeding capabilities. A push system ensures that rations are available in the operations area. However, a sufficient quantity of the type rations desired may not be in the right supply point to support units, and units have limited control over the type of rations sent to them.

Pull System

MCFFS policies and procedures are based on a pull system. A pull system has the lowest user element (field kitchen) placing a demand on the Class I supply system that is processed through the supply system. Then subsistence is sent forward to satisfy the request from the field kitchen. A pull system provides tighter control of available subsistence, while being responsive to the user. The pull system, however, may require longer lead times for ordering.

Distribution Variances

The actual Class I distribution system may differ from one unit's mission or deployment to another. Factors to consider include Class I supply point locations, issue schedules, method of distribution (unit or item pile), and Class I issue times (day or night). Specifics of the Class I distribution system for deployment planning are also available from various unit documents, such as the CSS annex of the OPORD or LOIs and directives.

Other Planning Requirements

Additional factors to be included in operations planning are environmental protection, water, fuel, ice, waste disposal, subsistence inspections, and residuals (leftover usable food items). The following are areas requiring specific attention.

Location

Site selection and grid coordinates for the water, fuel, ice, trash, and ration breakdown points (RBPs) require attention. Fuel, water, and ice should be located near the Class I point to expedite resupply of supported units.

Disposal

Disposal of residuals also must be an integral part of the deployment planning process. Knowing the disposition instructions of usable food items not issued is especially crucial in overseas deployments.

Residuals that can or cannot be turned in to the supply point must be identified, and specific disposition plans established.

In addition, guidance for trash disposal must be provided to participants. Chapter 7 provides trash management details.

Ice

The planning factor for potable ice is based on 6 pounds per Marine per day in a temperate climate, and 11 pounds per Marine per day in an arid climate. Food service officers can adjust figures to suit the exercise or deployment based on actual unit demands.

CHAPTER 5. DEPLOYMENT AND REDEPLOYMENT

Procedures

Food service support is an essential part of any unit deployment. Commanders should ensure that deployment plans specify the earliest possible movement of personnel, equipment, and basic loads of rations. The deployment of the theater subsistence distribution activities and subsistence platoons should begin at the onset of theater operations. These personnel, their equipment, and transportation assets should be in place to receive and forward the subsistence required to sustain the force. Their locations should be planned and coordinated for compatibility with the overall layout of the theater distribution system. The food service officer and unit mess chiefs should advise commanders (at each level) of any special requirements during initial planning phases. The MCFFS permits food service operations in a variety of tactical situations, but they must be curtailed in nuclear, biological, and chemical (NBC) environments. Deployment procedures are—

- Unit movement to the deployment site.
- Site selection (subsistence supply and field mess) and layouts.
- Field feeding procedures including feeding doctrine.
- Remote site feeding.
- Accountability for rations in the field.
- Subsistence storage at field mess sites.
- Cold weather field feeding.
- Hot weather field feeding.
- Camouflage.

Unit Movement

Food service personnel may be required to serve meals or warm and cool beverages for convoy rest halts, railheads, and alert holding areas. Planners should ensure appropriate food service assets accompany the unit and are on hand at the reception site.

Class I Site Selection

Each Class I point must be accessible to its supply sources and customer units. Depending on METT-T factors, Class I distribution points may be co-located with water points. An area with cover and good drainage is selected near the main supply route; any permanent buildings should be used. Roads should be able to handle heavy traffic in a variety of weather conditions and be wide enough for the supply vehicles. The ground where rations are positioned must be able to support their weight. Directional signs are erected inside Class I points to avoid traffic congestion and accidents.

Size

The site should be large enough to handle the estimated volume of Class I supplies and equipment. A parking area is needed for vehicles stopping at the checkpoint, loading and unloading supplies, bringing in and taking out refrigerated trailers, and materials handling equipment (MHE) working the stacks. Class I sites must be large enough to afford some dispersion of supplies to lessen the chance of enemy destruction. Dunnage is used to keep the supplies off the ground, and tents and tarpaulins are used to provide protection when buildings are not available. Lighting must be adequate for safety and security. The perimeter should be fenced and checkpoints established at each exit and entrance. Figure 5-1, on page 5-2, shows the suggested layout for a rear area Class I supply point. Figure 5-2, on page 5-3, shows the suggested layout for a forward area Class I supply point.

Concealment and Cover

Because of the large amounts of supplies stored at a Class I point, it is extremely difficult to camouflage or conceal all of the subsistence. If trees are available, the palletized rations are placed under them. All trucks and MHE should be camouflaged with netting. When possible, terrain features should be used to protect the Class I point from enemy fire.

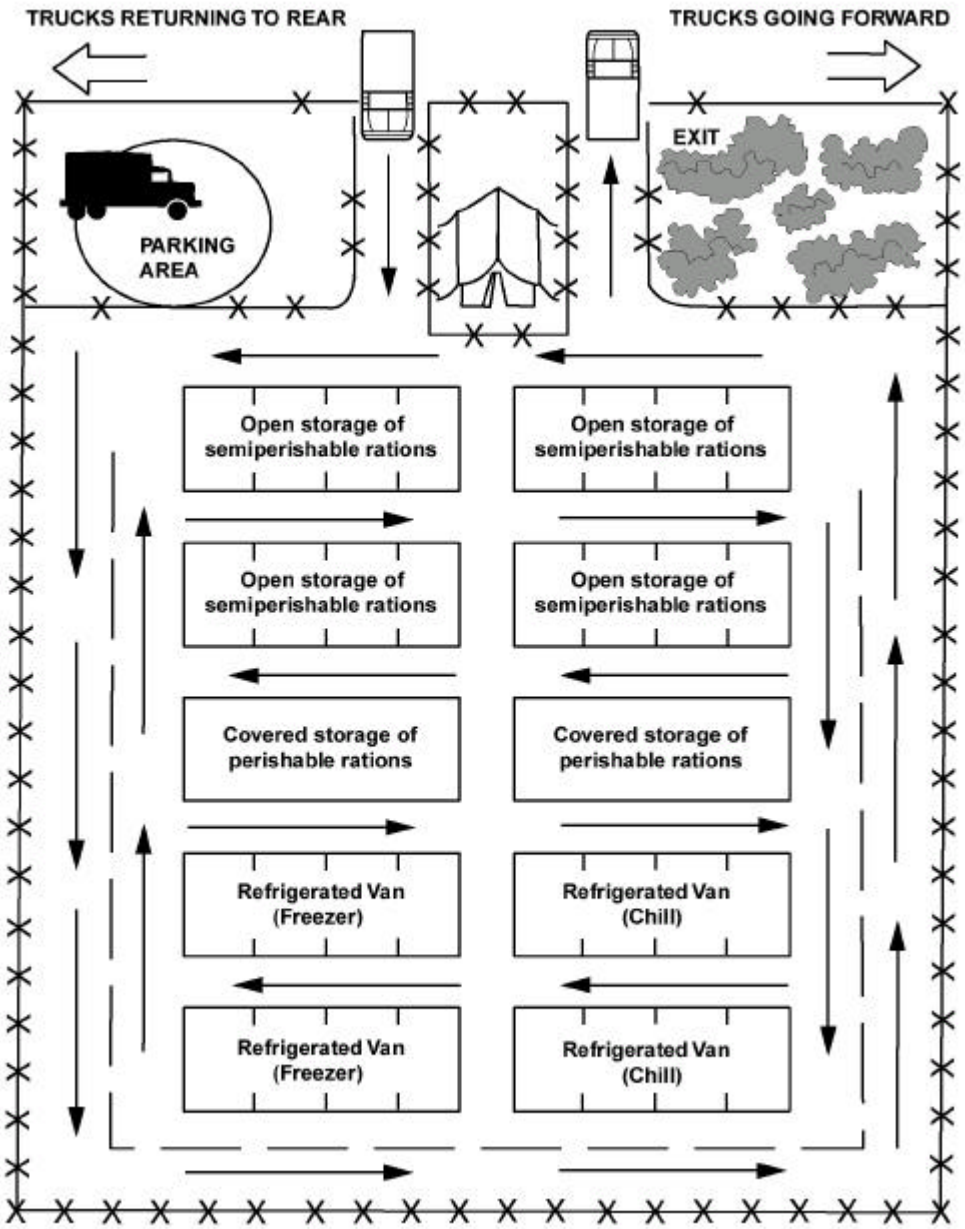

Figure 5-1. Rear Area Class I Supply Point.

Defense

Three-strand concertina wire is used to define the site's perimeter. The concertina wire is interlaced with sensors, trip flares, and antipersonnel mines to provide early warning of the enemy's approach. The condition of the perimeter is checked by security patrols daily. Fighting positions are included as part of the unit's overall defensive plan. Light and noise discipline are enforced as required by METT-T.

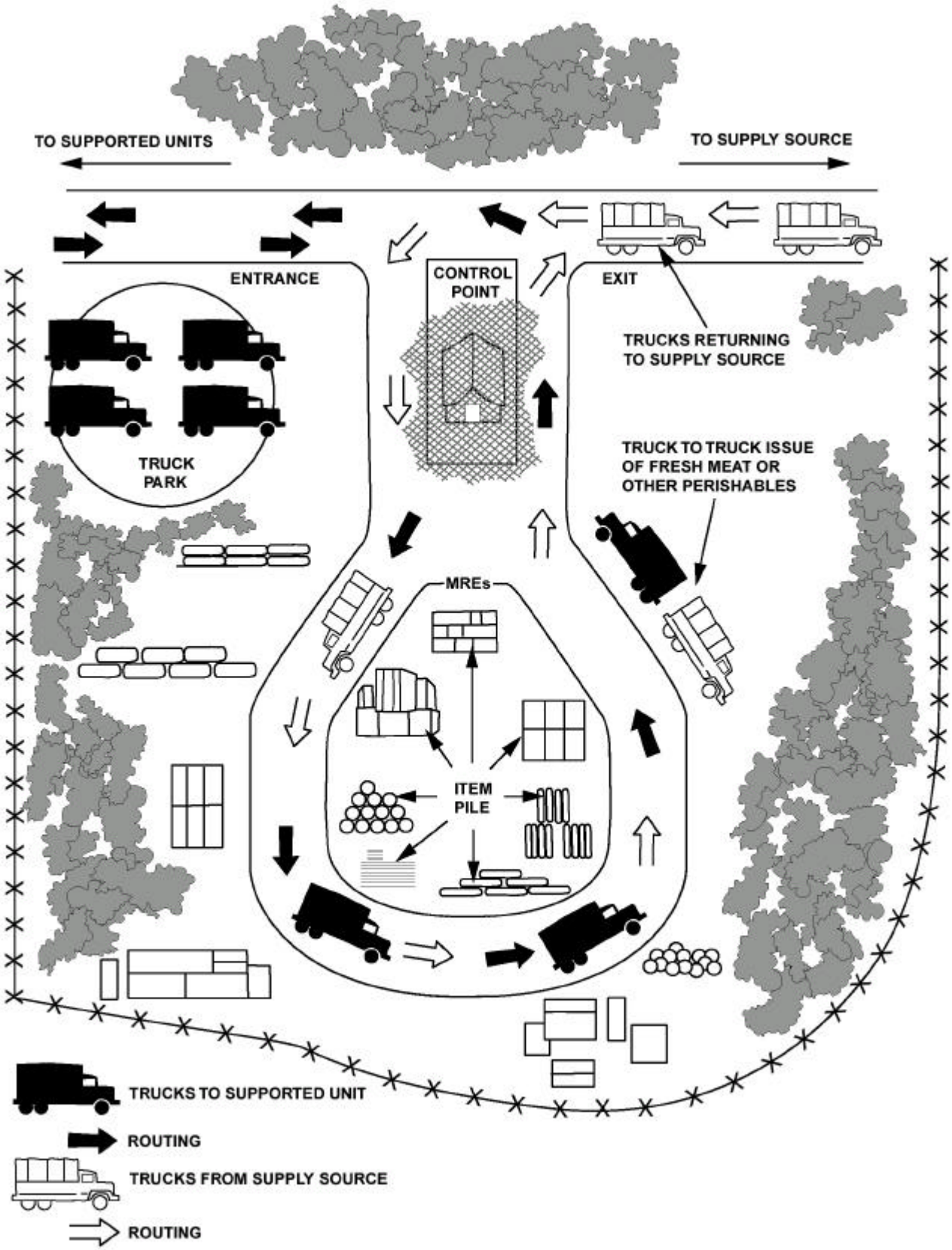

Figure 5-2. Forward Area Class I Supply Point.

Field Mess Site Selection

The unit commander or his representative specifies the general location of the field kitchen site. However, the mess chief must consider the characteristics of a good field site, as shown in table 5-1.

Table 5-1. Characteristics of a Good Field Mess Site.

Characteristic	Importance
Good natural cover.	Shields troops from the enemy and protects them from sun, heat, and cold winds.
Good access roads.	Lets supply trucks move freely.
High and dry ground near a protected slope.	Ensures good drainage and protection from the wind.
Enough space.	Eliminates crowding of the troops and facilitates spreading out the equipment so that personnel can work efficiently.
Near source of potable water.	Used in preparation of foods and beverages.
Sandy loam or graveled soil.	Lets excess water seep away and helps soakage pits and trenches work well.

The following should also be considered in selecting and setting up the field kitchen:

- Tactical or non-tactical operation.
- Extent of time the area will be occupied.
- Use of individual or single service disposable eating flatware.
- Method of solid waste disposal (burn, bury, backhaul).
- Resupply operations.
- Roadways and their accessibility.
- Use of tents or buildings.
- Billeting area location.
- Available equipment/space for proper arrangement.
- Natural cover to shield from the enemy and protect from the elements.
- High, dry ground near a protected slope for better drainage and protection from the elements.
- Convenient water source for purification when needed.
- Sandy loam or graveled soil to allow excess water to seep into ground to enable soakage pits and trenches to work correctly.
- Location away from latrines or any source of contaminants.

Field Mess Site Layout

Figure 5-3 and figure 5-4, on page 5-6, suggest placement of the different facilities required to operate a rear area field mess. The field mess area should be camouflaged to hinder detection by enemy aircraft, ground forces or infrared sensors. Passive measures should include dispersion, camouflage, cover and concealment, light and noise discipline, survivability moves, covering vehicle tracks into the field kitchen site, and staggering ration distribution to eliminate congestion of the site.

Field Feeding Procedures

There are two types of field messes:

- **Temporary site.** The temporary site is located close to the forward units and is operated for short durations (24 hours).
- **Semi-permanent site.** The semi-permanent site is located in the rear area for an indefinite time.

Field feeding procedures are determined by the availability of equipment and personnel, capability of the logistics system, level of commitment, availability of rations, and total sanitation requirements. Other considerations are the number of personnel to be fed, feeding times, location, and mission. Each field mess can be tailored to meet the requirements unique to each using unit. For example, some units may not require rapid mobility; therefore, a semi-permanent site may be established near troop concentrations to support that unit. Insulated food containers would be used to transport hot food to nearby units that require a larger degree of mobility.

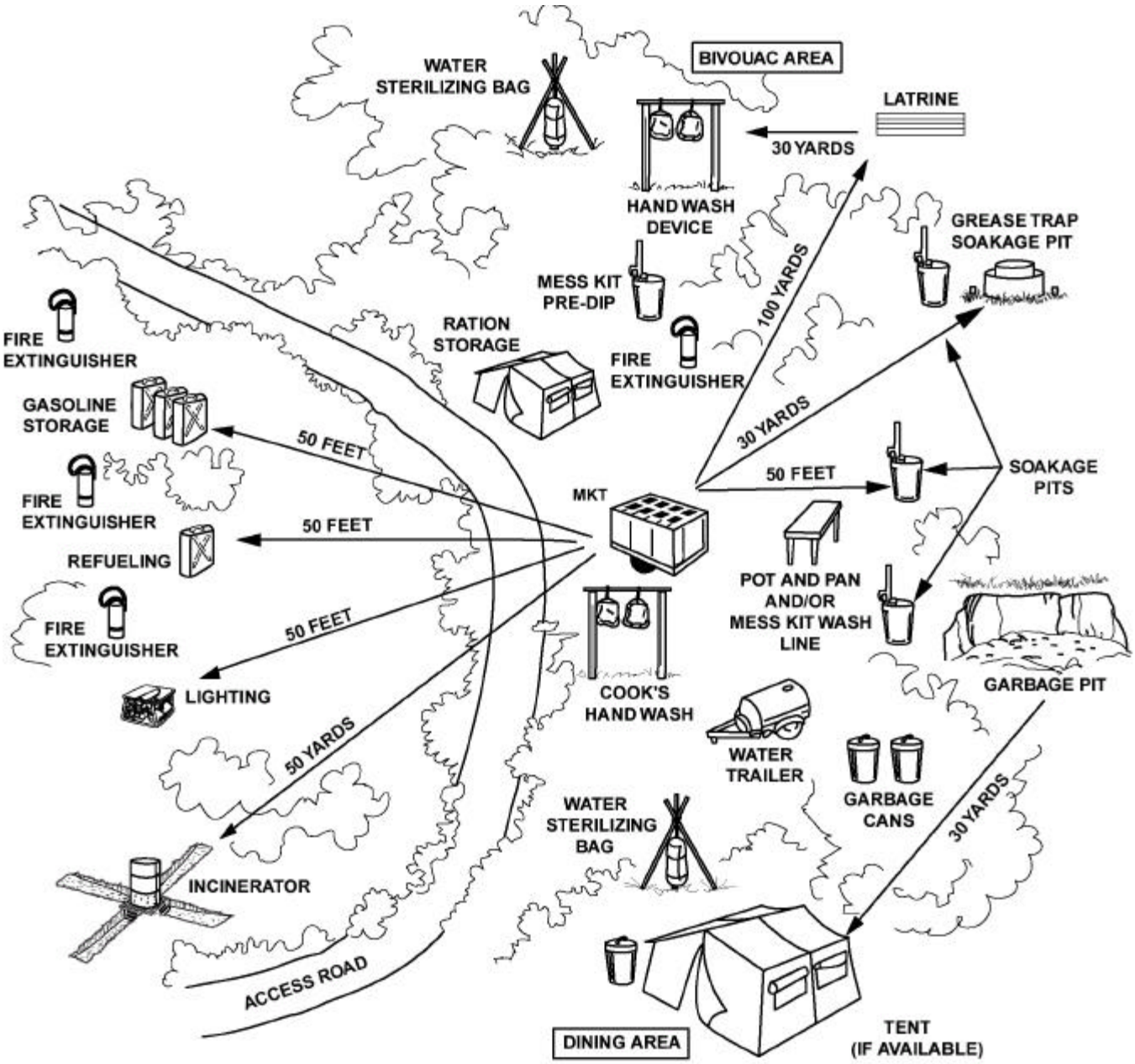

Figure 5-3. Recommended Field Mess Site Layout with the Pot and Pan Laundry Line.

Another option for units requiring high mobility is the use of the temporary field mess and/or TRHS. The use of the temporary field mess is recommended for its ability to have a favorable impact on morale. Although more logistically cumbersome than the TRHS, the palatability and variety of meals are more desirable. The use of the temporary field mess in conjunction with the TRHS is another option for expeditious feeding. Properly coordinated, the systems compliment one another by offering the commander a means of preparing a meal while on the move, and the ability to offer a more acceptable meal when the opportunity arises. The sole use of the TRHS is another option for the commander. However, its use must be limited to short periods of time for smaller units with a highly mobile mission. Long-term sole subsistence on UGR-H&S will have the same affect on physiology and morale as MREs.

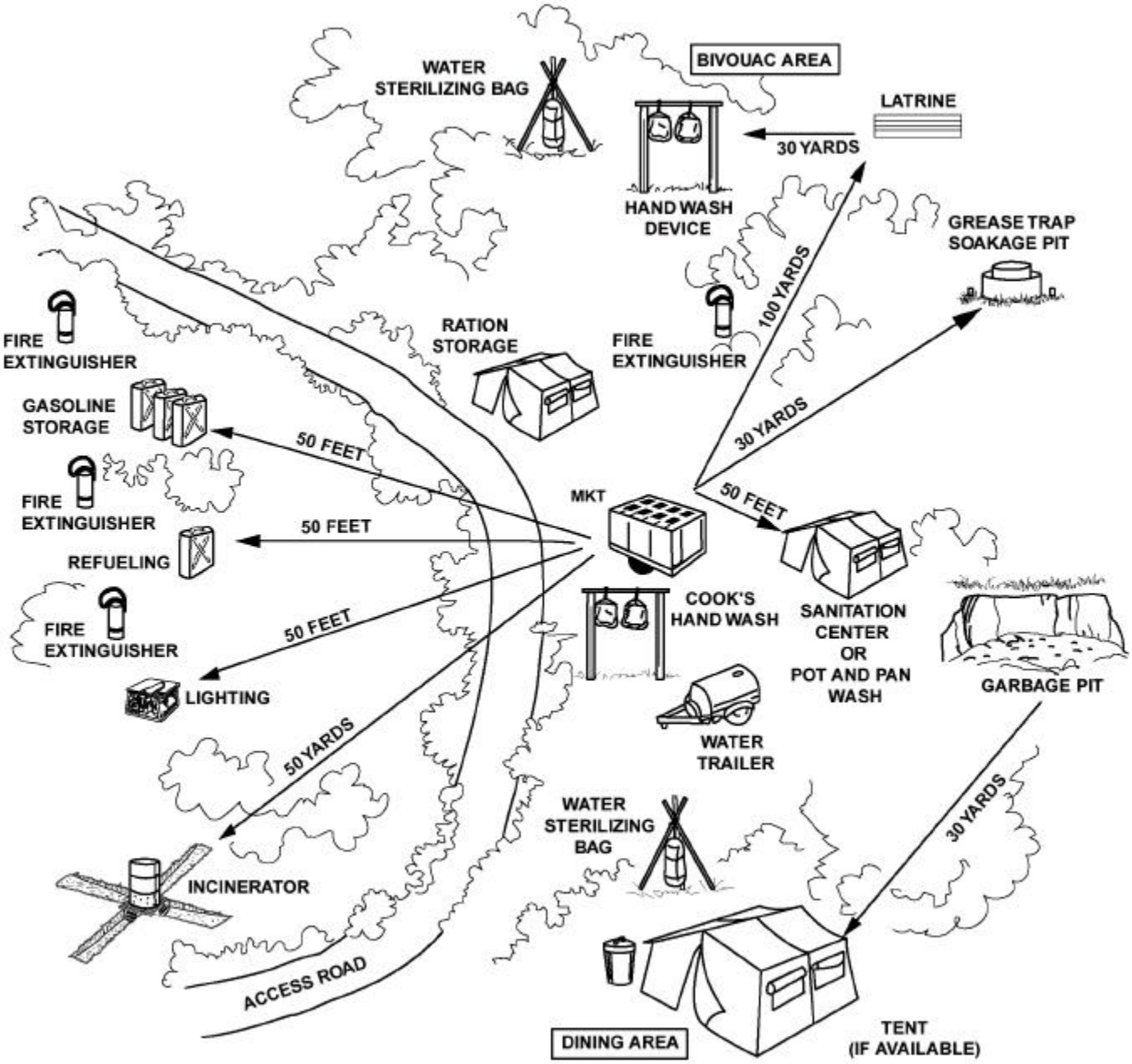

Figure 5-4. Recommended Field Mess Site Layout with the Sanitation Center.

Feeder units provide support to units in or passing through their area. Units with no authorized food service personnel are attached to a feeder unit for subsistence support. These supporting units also prepare and transport meals to remote sites when required. Food service personnel should be responsible for the transportation, setup, and feeding of units away from the field mess. Food service personnel should accompany meals sent to remote sites to ensure proper sanitation and that all personnel receive proper portions. Remote site feeding requires intensive management by commanders and food service personnel. Remote feeding may be accomplished by various methods. Units may send hot meals forward to remote sites using insulated food containers. When practical, the TRHS may be deployed to remote sites for hot meal preparation. Three food service Marines should accompany this equipment forward to remote units for hot meal preparation.

When staging prepared subsistence, dunnage should be used, and the area should be covered when possible. Staging can be by unit, by meal or by item. Whichever method is used, the staging area must be supervised by a food service Marine to ensure that units receive the proper amount of rations and instructions in sanitation and serving.

MCFFS Accountability

Receipt

Receipts must be obtained from approved local vendors or the ration issue point when rations are received. When receiving rations, food service personnel should conduct a quality and quantity inspection at the time of receipt to determine the condition of cans and packing materials and to verify the quantities received by signing and dating the forms provided. Food service personnel should keep a copy of all receipts for proper accounting and reconciliation.

Inventory

A daily running inventory of subsistence items on hand in the field mess must be maintained. This inventory is kept using manual or approved automated methods.

Reconciliation

When supported by the U.S. Army, a financial record is maintained by the Troop Issue Subsistence Activity (TISA). Unit commanders will ensure field mess financial records are reconciled regularly prior to departing. If the TISA is automated, an account update is provided to the field mess on a scheduled cycle. A copy of the final document will be included in the unit's Subsistence Operational Analysis Report (SOAR). The food service Marines maintain all invoices, reconcile all transactions for price changes and quantity received prior to closing the operation.

Accounting

Subsistence accounting must be performed in a manner that subsistence supplies are efficiently received, stored, and issued to the using units. To give subsistence management personnel sufficient data to properly manage subsistence supplies, the following management control forms are used:

- Subsistence issue receipts.
- Stock record and inventory control cards.
- Inventory, requisition, and issue forms.
- Daily cost analysis.
- Financial status.

Subsistence accounting is closely monitored and frequently audited by DOD agencies due to the large monetary value associated with subsistence supplies. Therefore, all subsistence accounting must be kept as accurate and up-to-date as possible. During wartime, the method for accounting is combat accountability. During peacetime, the prescribed method of accounting is accomplished by the SOAR or the Subsistence Report. A QSFR for field exercises will be submitted to the Headquarters Marine Corps (HQMC) (LFS-4).

A SOAR will be prepared for each operation where a field mess is implemented. The original SOAR will be submitted, via the appropriate chain of command, to the appropriate headquarters not later than 15 days following the end of the operation. A duplicate copy of the SOAR, with all supporting documents, also will be retained by the reporting activity for 2 years for audit purposes. The original SOAR will consist of the following supporting documents, arranged in the order presented:

- SOAR.
- Consolidated Man-Day Feed Report (NAVMC 565-1).
- Voucher for Disbursement and/or Collections (NAVCOMPT 2277).
- Applicable host-nation support and/or messing billing documents.
- Copies of invitational travel orders for foreign military personnel (if applicable).
- Applicable inter/intra-service support agreements or memorandums of understanding (MOUs).

A subsistence report is used in those situations when a field mess is not established. However, documentation for expenditure of military personnel Marine Corps subsistence funds is necessary.

The QSFR provides accurate accounting of PORs and military personnel Marine Corps (MPMC) subsistence funding to HQMC (LFS-4). This report also provides historic data and justification for budget submissions, as required by higher headquarters, as well as detailed documentation of budget execution to the Fiscal Division, HQMC. The QSFR is to be submitted 15 days after the end of the accounting period/exercise.

Combat accountability is a modification to normal operating accounting and reporting procedures and is used primarily during war. When the CMC authorizes combat accountability, the force commander may suspend formal accounting for Class I supplies. Specific guidance will be published accordingly; however, a monthly combat accountability subsistence report, with the type and value of the food items received and the number of personnel fed by category, will be compiled by the using unit and forwarded to higher headquarters.

Cold Weather Field Feeding

When preparing meals in cold weather conditions (32 °F or below), preventive maintenance and adequate deployment testing of all equipment is critical and must not be neglected. The failure rate of equipment increases in extreme cold environments, causing a need for more repair parts. Food service Marines require additional time and assistance in preparing rations and performing other tasks in extreme cold weather environments. This time requirement must be included in all planning. At temperatures below -20 °F, maintenance requires up to five times the normal amount of time. Daylight is also limited in extreme cold weather climates. Marines are authorized 4,500 calories per day in extreme cold weather. Menus must be designed to allow for the increased calories. When using the RCW, the issue will consist of one RCW and six trioxane compressed fuel bars per person per day, or four MREs and eight fuel bars per person per day. Either POR provides the 4,500 calories necessary.

Hot Weather Field Feeding

With temperatures exceeding 140 °F under tents during the noon and lunch hours, cooking and serving food could produce heat causalities. Because of the extreme heat, M-2 Burners or fuel tanks of immersion water heaters are not filled until they are ready to be used. Continuous maintenance is required to reduce malfunctions of equipment due to sand and dirt. Experience indicates that a 900-man battalion will require at least 6,400 gallons of drinking water per 24-hour period (7 gallons per man) in extreme heat.

Camouflage

The subsistence supply point and field mess area must be camouflaged to keep enemy aircraft, ground forces or infrared sensors from finding it. Precautions include:

- Do not let the troops gather in large groups to eat.
- Make sure the area and equipment cannot be seen from the air.
- Screen the dining area from ground observation if it is set up near combat or hostile areas.
- Bury or retrograde disposable dishes and utensils, tin cans, and litter from packaged rations.
- Camouflage the area where refuse is buried. Class I personnel must be aware of policy on retrograde or disposal of condemned rations. Make sure food service and Class I personnel are aware of the policy on garbage disposal in their area of operations.
- Camouflage equipment and other things that might reflect light and keep them out of sunlight.
- Use light discipline when required. In blackout conditions, cease all field kitchen operations and eat MREs during these periods. Ensure the ration breakdown points use appropriate lighting during night operations.

Planning Factors for Redeployment

Planning Class I and food service requirements for redeployment is equally as important as planning for deployments.

Preparing for Redeployment

The mess chief must ensure that enough Class I supplies are available to sustain the unit enroute to its home station. If residuals are present at the end of the exercise or deployment, excess Class I supplies are turned in to the supporting supply activity. Attention to detail and coordination with commander and staff will ensure smooth unit movement.

Closing the Deployment Site

Following the correct procedures for closing the field mess and Class I areas of operations is extremely important. Consideration must be given to the environmental impacts caused by soakage pits, grease traps, trash pits, and incinerators. There are several U.S. Army field manuals (FM 5-20, *Camouflage*, FM 21-10, *Hygiene and Sanitation*, and FM 21-10.1, *Unit Field Sanitation Team*) that provide information on closing the field site. Chapter 3 details the correct methods of cleaning and maintaining equipment before movement back to home station.

Moving the Unit to the Home Station

It is essential that the unit be prepared to provide food service support during redeployment. The commander and unit embarkation officer should be the first stop in gathering information. They will provide the specifics of when, how, and where the unit will move. Also, they can provide specific food service needs such as convoy rest halts, railhead support, and overnight commitments.

Accounting for Residuals

All unopened modules, boxes of MREs, and excess/ loose semi-perishable A rations and UGR are turned in. At the end of the field operation or deployment, the mess chief must coordinate with the food service officer to transfer all loose MREs and residual unitized ration items to another field mess or supporting garrison messhall.

CHAPTER 6. CLASS I STORAGE AND ISSUE PROCEDURES

Subsistence Storage at the Class I Point

This chapter contains guidance for Class I storage and issue operations. Included are procedures for perishable storage, semi-perishable storage, handling of the MREs in freezing temperatures, storing and handling the RSFH, sanitation at storage points, pest control, inspections, and ration issue.

Types of Storage

A covered storage area is in a walled and roofed structure. An open storage area provides protection that can vary from no protection, to the protection of tarpaulins, tents, huts or sheds. Class I supplies, even semi-perishables, keep best in covered storage. However, the rapid turnover in the field eliminates many long-term storage problems.

Methods

Supplies are stored so that those with the oldest date of pack are easily issued first. To prevent total destruction in the event of enemy attack, perishable and semi-perishable subsistence are stored and disposed in separate locations.

Perishable Storage

It is important that proper temperatures, humidity, and air circulation are maintained and only compatible products are stored together.

Temperature

Perishables stored below prescribed temperatures can suffer chill injury. The temperature for storing frozen subsistence should not exceed 0 °F. During transportation, the temperature should not exceed 10 °F. For ice cream, the recommended temperature is -10 °F and should not exceed 0 °F at any time. Chilled items should be stored at 34 °F to 41 °F. Each storage container (mobile or fixed) is equipped with a thermometer that must be checked frequently; at a minimum, twice a day.

Humidity

Prescribed humidity levels prevent items from gaining or losing moisture. A high humidity level allows moisture to condense on an item and be absorbed. A humidity level that is too low allows the item to dry out.

Air Circulation

Proper circulation of refrigerated air is the prime factor in keeping the temperature in all parts of storage spaces at recommended levels. It is also important in keeping eggs fresh and in preventing carbon dioxide from building up in fresh fruits and vegetable compartments. Pallets are used raise containers off of the floor and permit the free circulation of air. Containers are stacked to ensure a 4-foot wall clearance and a 2-foot ceiling clearance, with adequate working space between stacks. Fan or duct systems maintain proper circulation. Items should not be stacked in front of the refrigeration unit or the fan in prefabricated units.

Product Compatibility

Storing incompatible products together may result in color loss, taste changes, and odor absorption. Products should be grouped according to compatibility. Odor-absorbing items—such as meat, eggs, and dairy products—should not be stored with odor-producing items such as apples or citrus fruits.

Storage Precautions

As soon as frozen items are delivered, they should be transferred to freezer storage. If the product's temperature is higher than the temperature in the freezer, the shipping containers are placed on pallets or hand trucks to allow the air to circulate and reduce the product temperature as quickly as possible. The containers should be stacked more compactly once a uniform

temperature is achieved. Items that have thawed are never refrozen. Items are not stacked so high that containers on the bottom are damaged, and the contents are crushed and bruised. Egg cases should not be stacked more than 5 feet high. Items are stored so that the oldest lots, by date of pack, are issued first. The only exception to this first in, first out rule is when older lots are in better condition than newer ones. If perishables are stored properly, they should show no major loss of quality within 20 percent of their storage life.

Semi-Perishable Storage

Semi-perishables are not as susceptible to spoilage as perishables. They may spoil if they are handled or stored incorrectly or if they are kept for too long. Properly storing and protecting semi-perishables ensures that products are tasty and safe for consumption during their shelf life and possibly beyond.

[**Note**: after veterinary personnel inspect a product, its shelf life may be extended.]

Correct Storage

Items are not stacked so high that boxes and their contents are damaged. Items are not placed directly on the floor. Bagged items should not be stored in corners, and no subsistence should be stored directly against walls. MRE cases may be stacked up to four pallets high. In open storage, items should be placed on pallets and organized for ease of access.

Freezing Temperatures

For dry or low moisture semi-perishable items, freezing temperatures do little or no damage. Freezing may cause damage to the packaging of items that have water as a content. Can seams (commercial and tray pack) may rupture, and MRE pouches may be cut or punctured. This damage can lead to serious health risk if items are not properly handled and inspected by veterinary personnel. Metal cans are not generally engineered for freezing. Frozen cans and MRE pouches should not be rough handled as this may compound the problem. Storage life of semi-perishable rations is extended by lower temperature storage (from 50 °F to as low as 32 °F). Frozen storage is not recommended.

High Temperatures

High storage temperatures encourage the growth of bacteria and molds, promote insect infestation, and shorten the approximate storage life of semi-perishable items. The serviceable storage life of MREs decreases as storage temperatures increase. UGR-H&S have been designed to have a minimum shelf life of 18 months when stored at 80 °F or 6 months at 100 °F. In fixed warehouse facilities, semi-perishable items should not be stacked so high that they are damaged by higher temperatures near ceilings (hot air rises). Items should not be stacked near hot water heaters, steam, heat pipes or in metal buildings and trailers without adequate ventilation to prevent heat build up. Fans should be used to provide ventilation and to prevent excessively high temperatures. Food items should not be stored in direct sunlight. In open storage, natural cover can help reduce damage from direct sunlight and high temperatures.

[**Note**: Refrain from covering UHT milk and/or other subsistence items with black plastic in a field environment. Black plastic intensifies temperatures and causes rapid deterioration of subsistence.]

High Humidity

Avoid high humidity when possible because it encourages the growth of bacteria and molds and promotes insect infestation. High humidity also causes dry items to absorb moisture, making them cake and harden. Loss of flavor and discoloration may also occur in some items. Humidity also causes metal containers to rust and boxes to weaken.

Exposure to Light

Items packed in clear containers may lose their flavor as a result of over-heating and may become discolored when exposed to light for prolonged periods. To prevent these problems, clear containers should be boxed or in areas with reduced light exposure.

Pests

Insects, birds, and rodents must be prevented from entering storage areas as they damage food packaging and transmit disease.

Handling of the MRE in Freezing Temperatures

The flexible film pouch used for MRE items—such as the entree or wet pack fruit—becomes less flexible or more brittle at temperatures below 0 °F. The contents of the pouch freeze in random shapes, creating sharp edges or points. These edges and points may cut, puncture or otherwise damage the pouch if roughly handled. When the contents are thawed, bacteria can begin to grow, and the food becomes unfit for consumption.

The following procedures will reduce the possibility of damaged pouches and food-borne illnesses. MREs that become frozen during exercises should be kept frozen until issued for immediate consumption. If frozen MREs are returned to storage and thawed, they must be segregated and marked with a placard stating "Hold, previously frozen, returned to heated storage on (date), cleared for issue (date [minimum of 30 days after returned to heated storage])."

Frozen MREs are tempered to ensure that the center of pallets or boxes reaches room temperature (77 °F). MREs are held at this temperature for 30 days and then inspected by the Army Veterinary Service prior to issue.

The time and temperature period stated will allow the contents of the pouches to react, if spoilage bacteria are present. Rations not intended for freezing should not be frozen. The product quality will deteriorate with each freeze/thaw cycle, but the food will remain wholesome as long as the pouch is not damaged. The MRE should not be cycled through more than five freeze/thaw cycles.

Storing and Handling the RSFH

Packaging

RSFHs are packed in both case lots (boxes), and as individual units within the MRE pouch. In bulk pack, each RSFH heater pad is packaged in a sealed polyethylene bag. Twelve RSFHs are packed into a plastic shrink-wrap sleeve. Each box contains 24 unit packs (288 RSFH). Each pallet of the RSFH contains 30 boxes and 8,640 heater pads. Pallets are wrapped in polyethylene, covered with a top cap, and strapped to protect the shipping boxes.

Storage

Because RSFHs packaged within the MRE box are not regulated by the Department of Transportation (DOT), no special handling or storage is required. The following guidelines are applicable to bulk storage of the RSFH. Specific storage guidelines are in DOD Regulation 4145.19-R-1, *Storage and Material Handling*.

The installation fire protection officials are notified of location of stored RSFHs. They may impose local storage decisions. Handling and storing RSFHs present no health hazard beyond that of combustible materials.

Boxes are stored in dry storage areas where protection against the elements is provided. Wrapping or use of tarpaulins on pallets will aid in the prevention of water damage.

Boxes are stored under sprinkler systems that meet DOD standards. When possible, end bays should be used for the storage of RSFHs. Stacks of RSFHs are to be arranged for access to the stack's interior and removal to outdoors for fire fighting.

Quick response to fire detection and use of appropriate fire fighting agents are important. Fire fighting agents are to be present for both Class A and Class D protection. Any damaged boxes must be removed from storage and inspected, and the contents repackaged in the required container or disposed of properly. Damaged

boxes should be considered for first issue as a distressed item.

The RSFH is activated according to the instructions, then disposed of as ordinary waste. It may also be incinerated in a waste facility ensuring that all material is burned thoroughly.

Transportation (Bulk Pack Only)

All transport vehicles (including air and sea cargo containers), other than military, are to have placards on the cargo that read “Dangerous When Wet.”

Sanitation at Storage Points

Sanitation in a subsistence supply activity must be maintained per NAVMED P5010. Contaminated food can cause illness and death. Food that must be disposed of is a loss to the government and can have an adverse impact on mission accomplishment. Environmental protection laws and regulations must be followed when disposing of subsistence.

Personnel

Class I personnel should be neat, clean, and free of disease and infection before they are allowed to handle subsistence. They should not smoke or chew tobacco when handling subsistence. Disposable gloves used in handling fresh foods should be impermeable to contamination. Personnel must wash their hands thoroughly before starting work, before eating, after breaks, and after using the head.

Area and Equipment

Storage areas should be kept clean, orderly, and free of garbage at all times. Garbage should be disposed of in approved containers with tight-fitting lids. Spilled food should be cleaned up as soon as possible to prevent insect and rodent infestation. Scales and materials handling equipment (MHE) should be kept clean. Hand-washing facilities should be readily available for food service personnel.

Transportation

Vehicles used to transport subsistence should be clean, free of moisture, and have pallets to keep subsistence off the bed of the truck. The front and rear flap should be lowered and secured during transport. Vehicles used to transport food are not to be used to transport garbage or petroleum products while transporting subsistence. The bed of the truck should be free of harmful protrusions such as nails that could puncture food containers. Refrigerated or insulated vehicles should be used to transport perishables when time, distance, and outside temperature could cause the temperature to rise above required safe levels for refrigerated and frozen items.

Pest Control

Class I and food service personnel must assist in controlling pests by maintaining properly established and sanitary operations. Pest-proofing the storage area, food deprivation, and use of appropriate extermination measures can control pests. When pests are discovered in the storage area, the preventive medicine activity must be notified immediately.

Insects

Incoming supplies should be inspected carefully for infestation and empty cartons should be removed from the premises promptly. In fixed facilities, screens should be used on outside doors. When supplies are received, doors and screens should be open for the shortest time possible. Cracks in the walls and floors should be filled. Rest rooms should be kept clean. Garbage cans should be kept covered with tight-fitting lids, and the contents disposed of promptly to prevent breeding. Subsistence should be stored on pallets away from walls to eliminate hiding places and to facilitate inspection and cleaning. If at all possible, subsistence should be on shelves or dunnage a minimum of 6 inches off the floor or ground, and a minimum of 4 inches away from the walls to permit cleanup of spills. In open storage, supplies should be covered with tarpaulins or clear plastic when practical. Broken containers of food should be cleaned up quickly and completely. If areas do become infested, insecticides are used for control.

Rodents

The first step in rat and mouse control is to prevent their entry into the storage facility. Holes should be covered or filled in, and doors should close tightly. The next step is to eliminate rodent hiding places by keeping subsistence on pallets away from walls. Finally, their food sources should be eliminated by proper garbage disposal and good housekeeping. If areas become infested, traps and poison baits can be used for elimination. The use of poison baits must be approved by the medical authority; approval is based on compliance with environmental stewardship principles. All environmental laws and regulations must be adhered to in the use of poison baits.

Inspections

Subsistence supplies are inspected from the time they are received until they are consumed. Inspections ensure that only food fit for consumption is received and issued.

Responsibilities

Inspections should be performed on all subsistence items before they are accepted. This inspection ensures that items are received in good condition and in the authorized quantities. A representative of the Army Veterinary Service is responsible for inspecting all animal-origin and perishable subsistence as it is received at a supply point. Semi-perishables are not inspected by the veterinary food inspector on receipt unless requested by the accountable officer for local procurement. If the subsistence is wholesome, complies with contract requirements, and the contractor can be identified from container markings or shipping documents, the veterinary food inspector stamps the delivery documents. Veterinary food inspectors are also responsible for conducting inspections on subsistence in storage to detect early signs of deteriorating food. Cases of semi-perishables that pass inspection are stamped with an inspection test date (ITD). The ITD indicates the approximate remaining shelf life. Rejected items are reported to the accountable officer who then initiates appropriate disposal action.

Inspection Types

There are three types of inspections: visual, sampling, and full.

Visual

Usually, subsistence supply Marines perform the visual inspection. The inspector checks the outside of the Class I item or its container for damage or deterioration. Damaged containers, such as broken boxes and dented cans, should be inspected by the Army Veterinary Service.

Sampling

In sampling, the veterinary food inspector chooses a number of units at random and inspects them thoroughly. If any of the samples are damaged or deteriorated, the veterinary food inspector performs a full inspection. Items used during sampling inspections are accounted for on Department of Army Form 3161 as an identifiable loss.

Full

The veterinary food inspector thoroughly examines all units of a particular item or shipment. Damaged or deteriorated items are set aside, and the veterinary food inspector advises the accountable officer on disposition of the items. Full inspections should be conducted when procuring items from sources not previously approved.

Inspection Criteria

Canned Goods

Individual cans should be inspected when there is reason to believe they may be damaged. If boxes are broken or bent, they should be opened, and each can inspected. The veterinary food inspector should inspect cans that are rusted, swollen, leaking or dented, and those that have been stored for a long period of time or exposed to high temperatures.

UGR-H&S Rations

Tray packs are inspected for damage such as swelling or rust. Tray packs with any of the following defects should be set aside for further inspection and destruction:

- Leaks from a pinhole, a fracture or an incomplete seal where the contents of tray packs are on the outside of the container.
- Rust that actually penetrates the tray pack causing leakage or excessive end seam rust that cannot be removed with a soft cloth and would enter the product when the tray pack is opened.
- Dents that are so severe that they cause leakage or affect usability.
- Swollen or outwardly distended tray lids bulging from internal pressure or swells caused by physical damage such as dents or overheating.
- Buckles or bends in the top that extend into the end seam of the tray pack.

Other Semi-Perishables

Semi-perishables in jars, cardboard containers, and paper bags will spoil if they are mishandled or improperly stored. The containers should be inspected for signs of insects or rodents and damage from moisture or mishandling. Products in clear containers should be inspected for color changes. If any of these signs are evident, a veterinary food inspector should be called.

Fresh Fruits and Vegetables

Fresh fruits and vegetables should be inspected on receipt and every day while they are in storage. Fruits and vegetables must also be inspected for insect infestations including fruit flies, roaches, and worms. Preventive medicine and veterinary personnel must be notified if insects are seen. An effective test to determine if fruit and produce are fit for consumption is to cut them open and taste them. Items that have been freezer damaged will appear glassy, and those that have chill injury may be discolored and have an off-flavor.

Frozen Items

Frozen items, including meat, should be frozen solid when received. If thawed, they must be used immediately if approved by the veterinary food inspector. Thawed items should never be refrozen. Packages are checked on all sides for ice, which is a sign that they have thawed and been refrozen. Icy packages should be checked by the veterinary food inspector.

Other Perishables

Eggs are checked for breakage and freshness. Eggs should not be cracked, checked or dirty. At least one egg per case should be selected and opened. If the white clings to the yolk, is firm, high, does not break easily, and there is no odor, the eggs are acceptable. The temperature of the egg should be 41 °F. If not, contact the veterinary personnel. Other perishables are inspected for cleanliness and proper chilling.

Ration Issue

Class I supplies used during field operations will normally be picked up by the using unit at the Material Readiness Platoon issue point. Upon receipt of the rations, appropriate accounting measures are the responsibility of the receiving unit. Either manual or automated means will be used to reflect the receipt and issue of each item. Unitized rations are recorded under a single NSN for each module type, while A ration enhancements will be accounted for.

CHAPTER 7. SAFETY AND SANITATION

General Considerations

Field conditions in modern warfare can be altered rapidly and require foresight in order to deal with environmental stresses. Urban warfare may require troops to deploy into an area that previously had modern public utilities such as potable water lines, sanitary sewers, and waste disposal. Areas such as this can change overnight to an urban disaster area where all water, food, and services are suspect of contamination or have been destroyed.

In addition to preparing and serving meals, food service Marines will have to set up a field mess site or mobile kitchen(s), set up and operate sanitation unit(s), construct and maintain field expedient handwashing devices, dig soakage pits, and distribute food to areas away from the field mess area. These inherent tasks result in long working hours, so augmentation with mess attendants is absolutely necessary. The number of personnel required depends on unit feeding strength, mission, type of ration, and remote site feeding versus consolidated feeding.

Field food service equipment is inherently different from that used in garrison. Therefore, all authorized T/E equipment must be operational, and an adequate preventive maintenance program in place. Marines should be properly trained in the use and safety of field mess equipment before they attempt to use it. This is particularly important when using food service equipment that is operated with combustible fuels. Equipment technical manuals provide specific guidelines on the safe operation of equipment.

NAVMED P5010, chapter 9, provides guidance on field food service sanitation. Keeping the field mess area safe and sanitary takes more time in the field than in garrison. Food and water supplies may not be as carefully controlled as they are in garrison. Regular and careful inspection of food is of paramount importance and can help prevent food borne illnesses. Entire armies have been defeated by such disease outbreaks resulting from the mishandling of food and food-related waste. To prevent these diseases, the food service personnel must—

- Obtain food and water from approved sources.
- Prevent food contamination by ensuring the use of proper food handling, storage and utensil/equipment cleaning procedures. Retard the growth of microorganisms through the use of proper time and temperature controls.
- Train and motivate personnel in food sanitation standards and in personal health and hygiene matters.
- Dispose of all types of food-related waste (garbage, rubbish, and liquid kitchen waste) as outlined in NAVMED P5010, chapter 9.
- Clean vehicles used for transporting rations.

Perishable rations (A rations) require refrigeration. Therefore, extreme care should be used in their handling. Improper handling increases the potential for food borne illness.

Food service officers should prepare local SOPs clearly outlining the unit's system for meal distribution. The situation will dictate whether there will be a central distribution site or whether food service Marines will transport the meals.

Because of limited facilities in the field, the use of proper sanitary measures is even more important than it is in garrison messhalls. The following measures are emphasized:

- Food handlers should keep serving containers covered unless actually in use to protect against flies.
- Field dish washing is accomplished by either a three-compartment sink or the use of three 32-gallon corrugated cans, each with an immersion heater. The first can/compartment in the wash line contains hot (but not boiling) soapy water. The second and third cans/compartments hold boiling water. The proper temperature for each sink or compartment are listed in NAVMED P5010, chapters 1 and 9.

Combat Field Feeding

Logistical support areas in the theater are high priority targets for enemy NBC employment. Sophisticated delivery systems for NBC munitions allow the enemy to employ such munitions from the FEBA to the rearmost boundaries of the theater. The main countermeasure to this threat is the ability to continue operations while subjected to an NBC attack. Marines must still receive rations without delay that are safe to consume. Although the subsistence may be safe, contaminated cooking utensils and equipment may require the use of PORs (MREs, RCW, etc.). The tactical situation and the priorities of decontamination will determine how long PORs will have to be consumed.

Mess chiefs should provide safety guidelines through daily meetings and SOPs. Guidelines should be developed to stop unsafe practices and working conditions and careless use of equipment. Marines must be taught to recognize and rectify unsafe conditions.

Mounted UGR-H&S can openers are used when possible. If mounted can openers are not available, the hand-held can openers are used. Marines must exercise caution when opening UGRs-H&S with hand-held can openers. Knives and other sharp implements should not be used to open corners that the can opener missed. A P38 can opener is included in each module for use when a hand-held can opener is not available. Heated, swollen cans should be tilted in a safe direction to avoid burns from hot juices.

Food service personnel must always be alert when they prepare or serve food. Burns, collisions, and falls are common accidents in field messes. Training can curtail unsafe working conditions and careless use of equipment. Accidents cost money through the loss of man-hours and damage or destruction of food and equipment. The resulting loss of personnel, subsistence, and equipment could impact negatively on mission accomplishment. For detailed information on safety refer to DOD Regulation 4145.19-R-1.

Base Camp Feeding

Food Management

All food service and mess attendant personnel shall be certified as food handlers by medical authorities in accordance with the current addition of NAVMED P5010.

When A rations are served in the field, adequate refrigeration support must be provided. Where adequate refrigeration capability is not available, unitized rations or PORs will be used exclusively.

Inserts, which must be used with insulated food containers, will be cleaned and sanitized prior to use. Containers will be pre-chilled or pre-heated as appropriate prior to filling. Food will be brought to safe temperatures prior to placement in containers. PHF held in insulated food containers for more than 4 hours will be discarded as food waste.

Individual-serving condiments are preferred in the field, however, condiments may be dispensed from sanitary dispensers.

Field-expedient hand washing facilities will be provided at food preparation areas.

Waste will be disposed of to minimize insect and rodent attraction. Garbage and rubbish will be buried, incinerated or disposed of according to local requirements.

Fresh fruits and vegetables grown in areas where human excreta is used as fertilizer, or where gastrointestinal or parasitic diseases are expected to be prevalent will not be consumed raw except with the approval of appropriate medical authorities.

[**Note**: When authorized for consumption, fruits and vegetables, including leafy vegetables, may be eaten raw if thoroughly washed in clean potable water, then disinfected by use of Disinfectant, Food Service (NSN 6840-00-810-6396), according to labeled packet instructions. Where food service disinfectant is not available, emergency disinfection of fruits and vegetables may be accomplished by thoroughly washing,

then soaking for 30 minutes in a 200-parts per million (ppm) chlorine solution or by immersion in potable water at 160 °F for 1 minute. The chlorine solution is prepared by mixing 1 tablespoon of household liquid bleach (NSN 6910-00-598-7316) with 1 gallon of cool potable water.]

Trash Management

Based on the scenario and federal, state, local or host-nation laws, commanders will determine whether to burn, bury, back-haul or use dumpsters to dispose of waste from field kitchens. The policy on garbage disposal in an AO must be disseminated. Waste must be removed from the kitchen area at least daily. Proper disposal of kitchen waste is also essential in limiting the battlefield signature.

Liquid Waste

Liquid waste disposal requires a soakage pit or trench equipped with a grease trap that strains out solid matter and grease. The soil absorbs the liquid waste. Figure 7-1 shows how to build a grease trap and soakage pit. Two pits are needed so that each pit can rest every other day. In porous soil, a soakage pit 4 feet (1.2 meters) square and 4 feet (1.2 meters) deep will handle 200 gallons (760 liters) of liquid per day. If the ground water level is close to the surface or if there is rock or clay near the surface, a soakage trench is dug. Figure 7-2, on page 7-4, shows how to build a soakage trench with a grease trap. Due to environmental concerns, liquid/solid grease may require separate disposal.

Solid Waste

Solid waste disposal is either buried, burned or back-hauled according to procedures described in the following paragraphs.

Burying. During peacetime, most state laws prohibit burying trash. However, during wartime, if the unit will be at a site for less than 1 week, solid waste may be

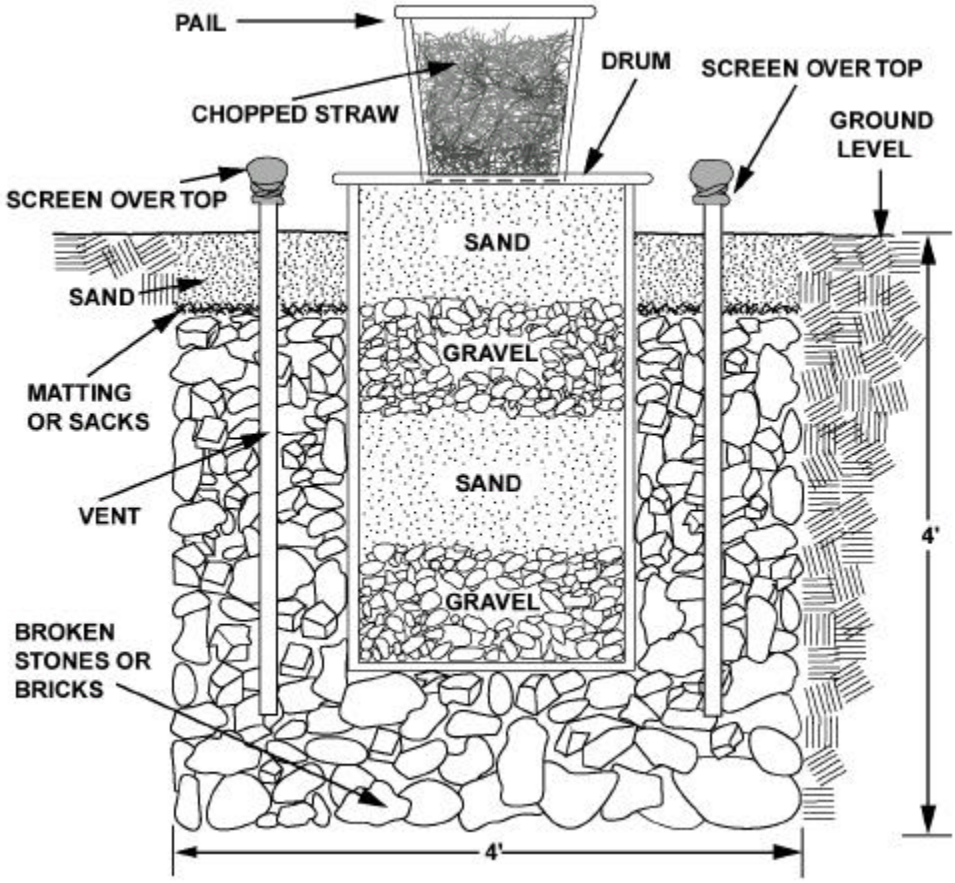

Figure 7-1. A Grease Trap and Soakage Pit.

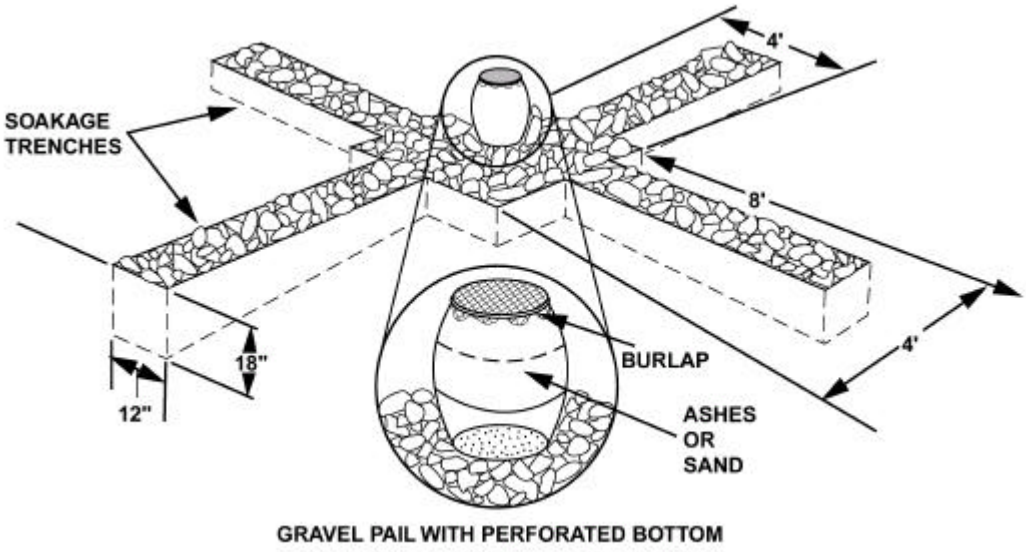

Figure 7-2. Soakage Trench with a Grease Trap.

buried in pits or trenches. These pits or trenches must be at least 27 meters (90 feet) from the dining area and at least 27 meters away from any water source used for cooking or drinking. If the unit will be at the site for only 1 day, the garbage pit is used. If the unit will be at the site for 2 days to 1 week, a garbage trench is used. Prior to disposal, cans are flattened, boxes are broken up, and UGR-H&S cans are nested.

Burning. During peacetime, most state laws prohibit burning trash. During wartime, if the unit is going to be at the site for more than 1 week, solid waste may be burned in an open incinerator, either inclined or cross-trench. Incinerators will not burn wet garbage; liquid waste must be separated from the solid waste. This can be done by straining the garbage through a coarse strainer, such as an oil bucket, can or a 55-gallon drum with holes in the bottom. The liquid is poured through a grease trap into a soakage pit or trench, then remaining solids are burned. Garbage that will not burn must be buried or hauled to a disposal site. Field incinerators must be at least 45 meters (150 feet) from the mess tent and dining areas so that the odor will not affect the Marines. Figure 7-3 shows how to build inclined and cross-trench incinerators.

[**Note**: Incinerators make smoke and should not be used if location disclosure results.]

Backhauling waste. When the operation plan calls for returning waste to a designated disposal point, the mess chief must arrange for transportation support. Waste should be bagged or boxed when possible.

Protection from Contamination

Personnel Protection

Generally, food is not prepared or served in an environment contaminated by NBC agents, nor are food service Marines trained to decontaminate subsistence items. This is the responsibility of veterinarians, Naval medical personnel, and NBC specialists. It is important that operations continue only after ensuring adequate individual protection. Field messes must be moved to uncontaminated areas and decontaminated before food service operations can be resumed.

Food Protection

Food must be protected from NBC contamination. Procedures for subsistence protection must be a part of

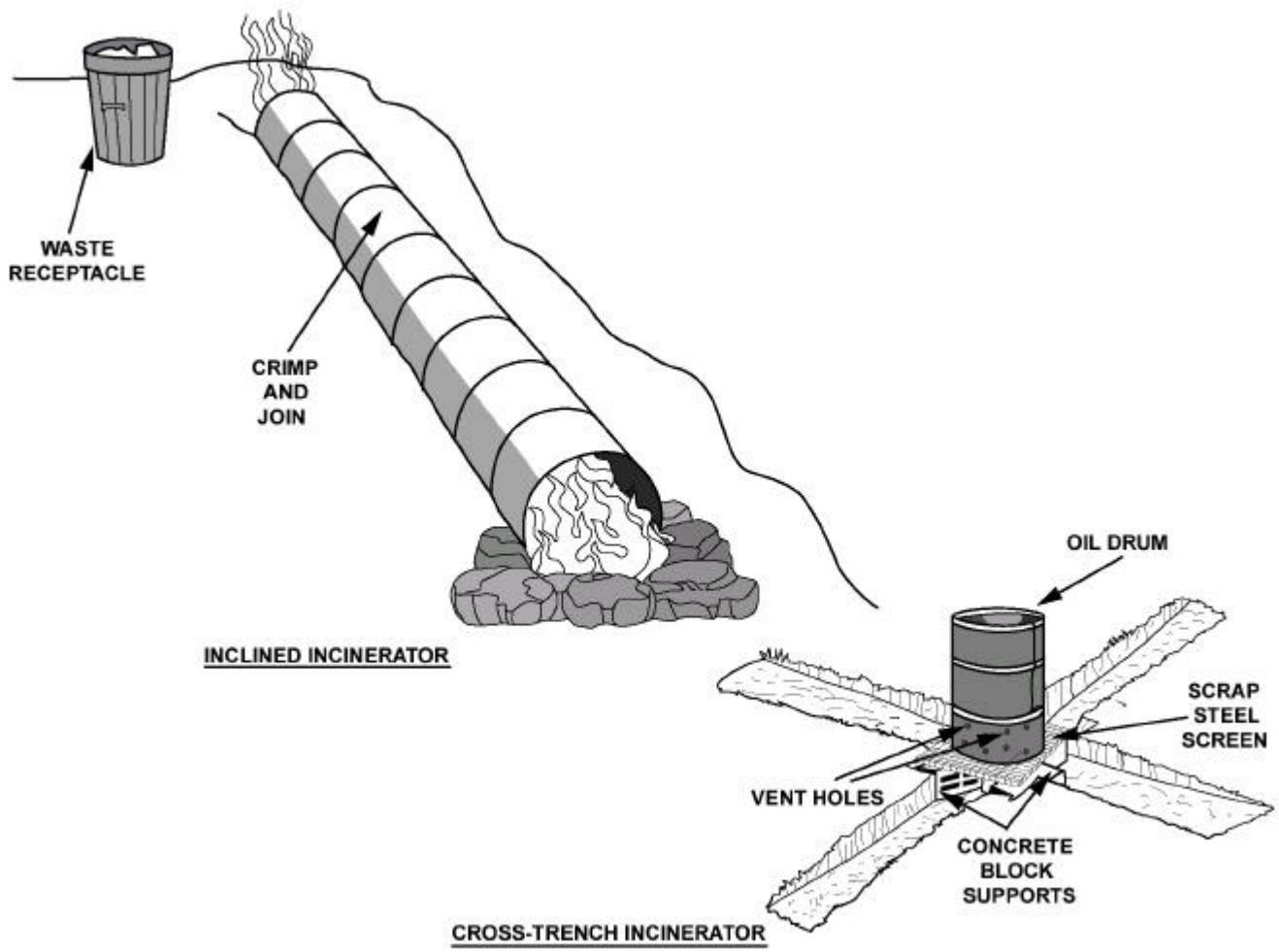

Figure 7-3. Inclined and Cross-Trench Incinerators.

operational plans and SOPs at all levels of food service operations. Consuming contaminated food may cause illness, injury or death. Food stored outdoors should be under overhead cover as mustard agents will damage or degrade most protective wraps. Some food items may be decontaminated and consumed, however, decontamination is often a difficult and time-consuming process. Subsistence must be stored in ways to provide maximum protection in the presence of NBC contaminants. Planning for storage may mean the difference between having edible or non-edible subsistence. Foods that are packed in cans, bottles, airtight foil or film wraps, as well as food packaged in sealed boxes or multi-layered wrappings may be stored outdoors or in partially protected areas. Foods not packaged in this manner must have covered storage inside to protect it from NBC contamination.

Food Inspection

Food or water that may be contaminated by nuclear fallout or biological or chemical agents must be inspected. The Army veterinary services has the sole responsibility for monitoring and recommending food decontamination or disposition procedures, and Navy

preventive medicine handles water. If food or water becomes contaminated, it must not be consumed unless it is first decontaminated or approved for consumption. Equipment or personnel may contaminate food or water that is otherwise free from contamination, so equipment and personnel must be inspected as well.

Disposal

Generally, food and water in airtight containers can be consumed after the containers have been decontaminated. Except in extreme emergencies, unprotected food and water are discarded. Unprotected food and water are decontaminated only when there is no practical alternative. All disposed contaminated items must be marked and treated as NBC hazard.

Decontamination

Foods that cannot be decontaminated are disposed of according to local laws or military regulations. If food preparation equipment or food service personnel have been exposed to NBC agents, they must be decontaminated. Personnel are decontaminated with the M258-series decontamination kit. Food service equipment should be decontaminated by power-driven decontamination equipment or by steam cleaners. A hot water and soapy wash must follow to ensure all decontaminates are removed before food products can be prepared.

APPENDIX A. FOOD SERVICE DEPLOYMENT PLANNING CHECKLIST

I. MISSION

A. What is the unit's mission?

B. What are the geographical, climatic, and environmental factors impacting on mission accomplishment?

C. What is projected length of mission?

D. Evaluate logistic support plan and CSS annex to the OPORD.

E. What headquarters is directing the deployment?

1. *Are supporting units specified?*
2. *When does the external support begin?*
3. *What support will the unit receive?*
4. *Is there a deployment contingency plan?*
5. *What food service personnel and equipment are included in the deployment plan? Do they travel with the unit? Who supports if food service personnel and equipment are not included in the initial deployment?*
6. *Is there an internal logistical support plan or Class I portion of the combat support annex?*
7. *Should the basic load of days of supply of Class I be issued to the individual Marine prior to deployment?*
8. *Will the basic load be consumed during the operation?*
9. *Have the supply source and operational dates for Class I been identified?*
10. *What are lead times for ration/supply requests?*
11. *What is the method of Class I distribution?*
12. *What is the flow of requisitions and Class I to using units?*
13. *What are Class I requirements to the supporting organization?*
14. *Where are supply and service locations (Class I, water, fuel, and landfill)?*
15. *What is the trash removal plan?*
16. *Are units trained in trash removal/disposition procedures?*
17. *What is the subsistence retrograde plan?*
18. *Are veterinary personnel available for subsistence support requirements?*
19. *If there are host-nation support facilities, do they meet U.S. sanitation guidelines? (Refer to NAVMED P5010)*
20. *Has funding for the host-nation support been established?*

II. PERSONNEL

A. Evaluate mission requirements to determine personnel needs.

B. Determine status of personnel, experience, training, and capabilities.

C. Evaluate projected workload to determine mess attendant support requirements.

D. Determine tours of duty for food service and subsistence personnel.

E. Determine training requirements, to include familiarization with unit/local SOPs and environmental standards in the area of operations.

F. Are personnel trained in accountability procedures?

G. What are cash meal payment and/or field meal reimbursement procedures?

H. Review medical threat briefing with particular attention to potable water supply, chlorine residual, food borne illnesses of local populations, and sanitary quality of local food supply.

III. EQUIPMENT

A. Review T/E, consolidated memorandum receipts, and temporary loan receipts for equipment to determine shortages, if any.

B. Evaluate status of equipment on hand to determine maintenance requirements.

C. Evaluate workload and mission to determine supplemental equipment and storage needs.

D. Evaluate spare parts on-hand and order shortages.

E. Evaluate projected ration mix to determine refrigeration and ice requirements.

F. Evaluate type and number of vehicles to determine packing and loading plans.

G. Evaluate maintenance support to determine resupply of equipment and spare parts in the field.

H. Review load plans for accuracy.

IV. SUPPLIES

A. Evaluate projected workload and mission to determine requirements for all disposable and expendable supplies.

B. Determine required stock levels. Prepare load list for required items.

C. Project fuel consumption to determine needs.

D. Forecast daily potable water consumption to determine water needs.

E. Evaluate mission support to determine resupply procedures for fuel, water, and disposables.

V. SUBSISTENCE

A. Determine ration accounting methods. Procure appropriate forms and establish procedures.

B. Determine feeding plan, ration mix/theater, and menu/type of rations needed.

C. What is the menu and ration cycle?

D. Has the menu been published and distributed?

E. Have enhancements been requested and programmed?

F. Have warming and cooling beverages been considered, ordered, and funded?

G. Determine number of personnel to subsist. Establish amounts of rations to request.

H. Evaluate issue and request cycle from supply activity to determine timely submission of ration requests, reports, and forms.

I. Determine daily need for ice to be requested. Is there a need for potable ice?

J. Evaluate food storage procedures to determine security needs.

K. Review inventory management procedures to reduce/control waste, loss, and excessive residuals.

VI. MISCELLANEOUS

A. Check publications and forms needed for the deployment.

B. Determine local waste disposal procedures and locations.

C. Coordinate plans for site selection and layout of the field mess.

D. Determine meal-serving periods.

E. Coordinate with supported units. Determine feeding level requirements and the need for remote site feeding.

F. Establish deployment teams for sending the TRHS forward to deployed units.

G. Review equipment operations, safety, and sanitation requirements with team.

H. Identify any site-specific environmental issues.

APPENDIX B. GLOSSARY

SECTION I. ACRONYMS AND ABBREVIATIONS

ACE. . . . . aviation combat element
AO. . . . . area of operations
AOR . . . . . .area of responsibility

CINC. . . . . .commander in chief
CMC . . . . . Commandant of the Marine Corps
CSS . . . . . combat service support
CSSE. . . . . combat service support element

DC/S I&L . . . . . Deputy Chief of Staff for Installations and Logistics (LFS-4)
DLA . . . . . .Defense Logistics Agency
DOD . . . . . Department of Defense
DOT . . . . . .Department of Transportation
DS . . . . . .direct support
DSCP. . . . . .Defense Supply Center Philadelphia

F . . . . . Fahrenheit
FEBA . . . . . forward edge of the battle area
FM. . . . . .field manual
FSC . . . . . field sanitation center
FSSG. . . . . .force service support group
FSO . . . . . food service officer
FSU . . . . . field sanitation unit
f^2 . . . . . .square foot
ft^3. . . . . .cubic foot

GCE. . . . . .ground combat element
GP . . . . . general purpose
Gp . . . . . group
GS . . . . . general support

HQMC. . . . . .Headquarters, Marine Corps
HMMWV . . . . . .high mobility multipurpose wheeled vehicle
HNS. . . . . host-nation support
HNM . . . . . host-nation messing

ISO . . . . . .International Organization for Standardization
ITD . . . . . inspection test date

LOI . . . . . letter of instruction

MAGTF. . . . . .Marine air-ground task force
MARFOR . . . . . .Marine Corps Forces
MARFORLANT. . . . . Marine Corps Forces Atlantic
MARFORPAC . . . . . .Marine Corps Forces Pacific
MCFFS . . . . . .Marine Corps Field Feeding System
MCI. . . . . .meal, combat, individual
MCW. . . . . .meal, cold weather
MEF . . . . . Marine expeditionary forces
MEP . . . . . mobile electric power
METT-T . . . . . mission, enemy, terrain and weather, troops and support available, time available
MHE . . . . . materials handling equipment
MKT . . . . . mobile kitchen trailer
MMC. . . . . materiel management center
MOS . . . . . military occupational specialty
MOU . . . . . .memorandum of understanding
MPMC. . . . . Military Personnel Marine Corps
MRE . . . . . meal, ready to eat

NAVCOMPT . . . . . .Navy comptroller
NAVMC . . . . . .Navy Marine Corps
NAVMED. . . . . Navy Medical
NBC . . . . . nuclear, biological, and chemical
NSN. . . . . national stock number

OMFTS . . . . . operational maneuver from the sea
OPLAN . . . . . operation plan
OPORD. . . . . operation order

PEB . . . . . pre-expendable bin
PHF . . . . . .potentially hazardous foods
POR. . . . . .packaged operational rations
ppm . . . . . parts per million
psi . . . . . pounds per square inch

QSFR. . . . . Quarterly Subsistence Financial Report

RBP . . . . . ration breakdown point
RCW . . . . . ration, cold weather
ROWPU. . . . . reverse osmosis water purification unit
RSFH. . . . . ration supplement, flameless heater
RSSP . . . . . .ration supplement sundries pack

SB . . . . . supply bulletin
SNCO . . . . . staff noncommissioned officer
SOAR . . . . .Subsistence Operational Analysis Report
SOP . . . . . standing operating procedure
STOM . . . . . ship-to-objective maneuver

T (ration) . . . . . tray
T/E. . . . . table of equipment
TISA . . . . . Troop Issue Subsistence Activity
TM. . . . . technical manual
T/O . . . . . table of organization
TRH. . . . . tray ration heater
TRHS. . . . . .Tray Ration Heating System

UBR. . . . . unitized B ration
UGR-H&S. . . . . .unitized group ration-heat and serve
UHT. . . . . ultra high thermo-stable
U.S. . . . . United States

WIMS . . . . . Worldwide Information Management System
WRS . . . . . war reserve stock

SECTION II. DEFINITIONS

A ration enhancements—A ration enhancements are perishable items that replace semi-perishable, like items and add variety, dietary fiber and troop acceptability to the UBR feeding plan. Enhancements normally consist of milk, bread or bread-like products, apples, oranges, lettuce, tomatoes and a combination of 50 percent fresh and 50 percent dehydrated eggs.

bread, shelf stable (BSS)—BSS was developed as an alternative to MRE crackers. It provides 200 calories (mostly carbohydrates) and is available in both white and whole wheat. BSS are shipped 96 packages per case.

combat accountability—A modification of normal (peacetime) operating accounting and reporting requirements, rendered necessary by combat conditions and implemented only when directed by the appropriate authority.

common-service feeding—The providing of meals by one military service to entitled personnel of another service for which an individual or service reimbursement is not required.

cross-service feeding—The providing of meals and/or bulk subsistence to members of Reserve components, other military services and foreign governments that require reimbursement from the agency receiving support.

field feeding—Feeding in a field mess while deployed on exercises/operations in an expeditionary/austere environment.

field duty—Service by a member when the member is subsisted in a government mess or with an organization drawing field rations, and:

a. The member is under orders operating against an actual or potential enemy, or

b. The member is serving on maneuvers, war games, field exercises, or similar types of operations.

field mess—A galley operated in the field, using field food service equipment.

food service Marine—An enlisted Marine in grades Private through Master Gunnery Sergeant who possesses MOS 3381, Food Service Specialist, or 3361, Subsistence Supply Clerk.

food service officer (FSO)—A limited duty officer (LDO), Chief Warrant Officer (CWO), or Warrant Officer (WO) who possess MOS 3302. FSOs are generally assigned at the MEF and MSC level only.

fuel bar, trioxane (FBT)—FBTs are used to heat water for MREs and RCWs. The FBT is packaged with 3 bars to a package and 400 packages to a box (1,200 bars). It is normally issued on a one bar to one-man basis for MREs and two boxes (six bars) per RCW.

host-nation feeding—Host nation feeding may consist of either of two types of support: host-nation support and host-nation messing. **(1)** Host Nation Support is defined as a procedure wherein bulk subsistence items are procured from a host nation and prepared by Marine Corps food service personnel. **(2)** Host-nation messing involves Marine Corps personnel subsisting in a host-nation messhall (civilian or military) in which the Marine Corps will reimburse the host-nation for meals provided (non-contractor support).

meal, ready to eat (MRE)—The primary individual ration used by the Marine Corps, MRE is designed for individual or group feeding when the situation will not permit a field kitchen to be established. The MRE consists of 12 menus, 12 meals (4 rations) per box, any 3 of which constitute a ration. Any combination of the three meals will give a nutritionally complete ration for 1 person for 1 day.

mess attendant—An enlisted Marine outside the 3300 occupational field detailed to the food service platoon that assists in the serving of food and cleanup.

operational rations—Rations composed of semi-perishable items prescribed for individuals performing operational duty in times of war or other emergencies. Operational rations also may be used in peacetime for training, emergencies, or travel in order to rotate stocks. Unitized rations and flight meals are examples of operational rations.

packaged operational rations (POR)—PORs are rations composed of semi-perishable items specially packaged, precooked, or prepared for personnel performing operational duty in time of combat or other emergency. PORs are used in peacetime for emergencies or field training in order that stocks may be rotated. Examples of PORs include the Meal Ready-to-Eat (MRE) and the Ration, Cold Weather (RCW).

ration, cold weather (RCW)—The RCW is specifically designed for cold weather activities. This ration is lighter and smaller than the MRE (based on three MREs versus one RCW). It provides an entree, snacks, and hot beverage mixes. Its components do not freeze. One ration provides a complete daily nutritional requirement of 4,500 calories for one individual per day. The RCW is packaged in two plastic pouches with an issue ratio of one ration per individual per day.

ration supplement, flameless heater (RSFH)—The RSFH is a chemical reaction heater developed to heat MRE entrees. RSFHs are packed in each box of MREs and shipped in a case of 288 units.

ration supplement sundries pack (RSSP)—The RSSP is designed to provide necessary health and comfort items for deployed units when exchange facilities or ship stores support is not available.

tray ration heating system (TRHS)—The TRHS is composed of a Tray Ration Heater (TRH) and associated collateral and support equipment that form a component whose singular purpose is the preparation of UGR-H&S. The TRHS is a mobile system with heat-on-the-move capability to feed 250 hot UGR-H&S ration meals to personnel in remote areas. It is capable of being installed on a HMMWV,

ultra-high temperature (UHT) milk—UHT milk is an enhancement to operational rations, and is packaged in 8 oz. containers in four flavors (white, chocolate, strawberry, and vanilla.)

unitized B ration (UBR)—UBRs consist of semi-perishable items, mainly canned and dehydrated, which do not require refrigeration. UBRs are unitized in 100-portion modules, under a single national stock number (NSN). UBR modules contain everything necessary to prepare 100 servings of a particular meal, to include paper products. There are currently 10 breakfast and 10 lunch/dinner UBR ration menus available.

unitized group ration-heat and serve (UGR-H&S)—UGR-H&S rations are expeditionary rations that are fully prepared, thermally processed, shelf-stable foods developed for use with the Tray Ration Heating System (TRHS). UGR-H&S rations are unitized in 50 man serving modules, and there are currently 7 breakfast and 14 lunch/dinner UGR-H&S ration menus available.

APPENDIX C. REFERENCES AND RELATED PUBLICATIONS

Department of Defense Regulation

4145.19-R-1	Storage and Material Handling

Navy Medical (NAVMED)

P5010	Food Service Sanitation

Field Manuals (FMs)

5-20	Camouflage
10-23	Basic Doctrine for Army Field Feeding and Class I Operations Management
21-10	Hygiene and Sanitation
21-10.1	Unit Field Sanitation Team

Technical Manuals (TMs)

08407A-13/1	Refrigeration Container Field
5-1080-200-13&P	Maintenance Manual for LTWT Camouflage Screen Support System
5-4540-202-12&P	Immerging Water Heater
10-7360-204-13&P	The Range Outfit Field
10-7360-206-13	Maintenance Manual for Field Kitchen Trailer Mounted
10-7360-206-23&P	Unit and Direct Support Maintenance Repair Parts and Special Tools List for Kitchen Field, Trailer Mounted Model MKT-75
10-8340-211-13	Maintenance Manual for Tent General Purpose
10-4500-200-13	Operator's Organizational and Direct Support Maintenance Manual (Including Repairs and Special Tools List) for Heaters, Space: Radiant Type, Portable

MARFORPAC Order/MARFORLANT Order

P1011.2/P10110.2	SOP for Food Service

Miscellaneous Publications

Federal Supply Catalog 8900-SL

Supply Bulletin 10-495-1 Standard "B" Rations for Armed Forces