By Order of the Secretary of the Army:

CARL E. VUONO
General, United States Army
Chief of Staff

Official:

THOMAS F. SIKORA
Brigadier General, United States Army
The Adjutant General

DISTRIBUTION:

Active Army, WAR, and ARNG: To be distributed In accordance with DA Form 12-11 E, requirements for FM 6-121, Field Artillery Target Acquisition (Qty rqr block no. 0068) and FM 6-161, Field Artillery Radar Systems (Qty rqr block no. 0760).

☆ U.S. GOVERNMENT PRINTING OFFICE: 1990—727-027/20070

PREFACE

This publication describes the doctrine, organization, tactics, techniques, and procedures for the management of field artillery target acquisition (TA) equipment, personnel, and systems. It combines information formerly in FM 6-121, *Field Artillery Target Acquisition*, and in FM 6-161, *Field Artillery Radars*. The material applies to field artillery (FA) target acquisition and how it interfaces with the fire support system. The concepts apply to both general and limited warfare.

The material presented herein is intended to help all personnel involved in the TA process. These personnel include:

- Maneuver commanders.
- Field artillery commanders and their staffs.
- Fire support element (FSE) personnel.
- Field artillery target acquisition personnel.
- Members of the division artillery and FA brigade tactical operations centers.
- personnel of the target acquisition battery (TAB) and corps TA detachment.
- All others involved in the targeting process, such as the corps and division G2s and all personnel in intelligence channels.

The book describes current FA target acquisition organizations. These include the target acquisition batteries in the armored and mechanized infantry divisions and the target acquisition platoon in each separate maneuver brigade. Also included are target acquisition detachments assigned at corps level. The book also describes TA assets that are organic to the direct support (DS) battalion (bn) in the light, airborne, and air assault divisions. However, despite the variety of TA organizations presented, the principles of their management and employment are the same.

The book discusses tactical and technical considerations of each field artillery TA system. It is expected that users at various echelons will concentrate on different parts of the book and will require varying degrees of detail in the discussions presented. For example, although Chapters 1 and 2 are general in nature and of interest to all readers, Chapter 3 is meant primarily for technicians and Chapter 4 is written for operations personnel. In this respect, some redundancy of information has been intentionally included throughout the book.

Field artillery TA radars are powerful force multipliers. The Threat is expected to use a number of electronic warfare (EW) assets and resources to locate our TA radars for destruction. Consequently, vulnerability and survivability are key subjects addressed herein.

In its development, FM 6-121 has undergone several draft revisions. Numerous individual Redlegs helped make it the authoritative FA target acquisition reference that it is. Members of every division artillery (div arty) have provided input at some stage in the development cycle. The units listed below provided representatives from the field to a unique exercise encompassing major input and comprehensive rewrite of the developed draft. The effort of these senior TA officers and warrant officers resulted in this final product. It reflects the consensus of the field on FA target acquisition tactics, techniques, and procedures for the employment of TA assets. The field representatives were from –

- 3d Corps Artillery, Fort Sill, Oklahoma.
- 1st Armored Division Artillery, Zirndorf, Federal Republic of Germany.
- 1st Cavalry Division Artillery, Fort Hood, Texas.
- 5th Infantry Division Artillery (Mechanized), Fort Polk, Louisiana.
- 7th Infantry (Light) Division Artillery, Fort Oral, California.
- 10lst Airborne (Air Assault) Division Artillery, Fort Campbell, Kentucky.
- 42d Field Artillery Brigade, 5th Corps Artillery, Giessen, Federal Republic of Germany.

The US Army Field Artillery School (USAFAS) owes them, and many others, a great debt of gratitude for the professionalism they displayed in true Redleg fashion.

The provisions of this publication are the subject of the following North Atlantic Treaty Organization (NATO) Standardization Agreements (STANAGs) and Quadripartite Standardization Agreements (QSTAGs):

- 2008 / 503, *Bombing, Shelling, Rocketing, Mortaring and Location Reports.*
- 2029 / 514, *Methods of Describing Ground Locations, Areas, and Boundaries.*

Field Manual
No. 6-121

HEADQUARTERS
DEPARTMENT OF THE ARMY
Washington, DC, 25 September 1990

Tactics, Techniques, and Procedures for

FIELD ARTILLERY TARGET ACQUISITION

Table of Contents

PAGE

PREFACE vii

CHAPTER 1

FIELD ARTILLERY TARGET ACQUISITION DOCTRINE AND SYSTEMS

TARGETING PROCESS 1-1

ROLE OF FIELD ARTILLERY TARGET ACQUISITION 1-2

TARGET ACQUISITION INTEGRATION IN THE FIELD ARTILLERY SYSTEM . . 1-2

TARGET ACQUISITION SUPPORT FOR COUNTERFIRE 1-3

WEAPONS-LOCATING RADARS 1-4

MOVING-TARGET-LOCATING RADARS 1-4

CHAPTER 2

FIELD ARTILLERY TARGET ACQUISITION ORGANIZATIONS

TARGET ACQUISITION BATTERY 2-1

TARGET ACQUISITION PLATOON OF A SEPARATE MANEUVER BRIGADE . . 2-5

CORPS TARGET ACQUISITION DETACHMENT 2-6

AN/TPQ-37 WEAPONS-LOCATING RADAR SECTION 2-8

DISTRIBUTION RESTRICTION: Distribution is authorized to US Government agencies only to protect technical or operational information from automatic dissemination under the International Exchange Program or by other means. This determination was made on 12 January 1990. Other requests for this document will be referred to Commandant, US Army Field Artillery School, ATTN: ATSF-DD, Fort Sill, OK 73503-5600.

DESTRUCTION NOTICE: Destroy by any method that will prevent disclosure of contents or reconstruction of the document.

* This Duplication supersedes FM 6-121, 13 December 1984, and FM 6-161,7 September 1984. It rescinds DA Form 2888, 1 May 1975; DA Form 5364-R, December 1984; DA Form 4706, 1 July 1978; and DA Form 4705-R, June 1978.

AN/TPQ-36 WEAPONS-LOCATING RADAR SECTION 2-9

AN/TPS-25A OR AN/TPS-58B
MOVING-TARGET-LOCATING RADAR SECTION 2-10

DUTIES OF RADAR SECTION PERSONNEL 2-11

CHAPTER 3

TECHNICAL ASPECTS OF TARGET ACQUISITION EMPLOYMENT

Section I. RADAR SYSTEM CHARACTERISTICS 3-1

WEAPONS-LOCATING RADARS 3-1

MOVING-TARGET-LOCATING RADARS 3-3

Section II. TECHNICAL ASPECTS OF SITE SELECTION AND POSITIONING . . 3-4

POSITION SELECTION CONSIDERATIONS 3-4

RECONNAISSANCE 3-4

TACTICAL AND TECHNICAL CONSIDERATIONS 3-5

SURVIVABILITY 3-7

CHAPTER 4

**TACTICAL EMPLOYMENT OF
FIELD ARTILLERY TARGET ACQUISITION ASSETS**

RADAR EMPLOYMENT 4-1

RESPONSIBILITIES 4-3

COMMAND AND CONTROL RELATIONSHIPS 4-5

SECTORS OF SEARCH 4-5

ZONES 4-6

COMMON SENSOR BOUNDARY 4-8

CUEING 4-10

COMMUNICATIONS 4-12

POSITIONING 4-12

OFFENSIVE OPERATIONS 4-18

DEFENSIVE OPERATIONS. 4-19

CHAPTER 5

TARGET ACQUISITION IN LIGHT DIVISIONS

BATTALION TASK FORCE 5-1

BRIGADE TASK FORCE 5-3
DIVISION DEPLOYMENT 5-4
CORPS AUGMENTATION 5-5

CHAPTER 6
FIELD ARTILLERY BRIGADE TARGET ACQUISITION

COUNTERFIRE ROLE 6-1
COMMAND AND CONTROL 6-1
LIAISON 6-2
COMMUNICATIONS 6-2

APPENDIX A
MANUAL PROCESSING OF TARGET DATA

RECORDING TARGET INFORMATION A-1
RECORDING TARGET INFORMATION GRAPHICALLY A-3
DIV ARTY TACTICAL OPERATIONS CENTER RESPONSIBILITIES A-6
TARGET DAMAGE ASSESSMENT A-7
PURGING TARGETS A-7

APPENDIX B
CRATER ANALYSIS AND REPORTING

GUN AND HOWITZER SHELL CRATER ANALYSIS B-1
SURVEY OR CRATER LOCATION B-1
DETERMINATION OF DIRECTION B-2
CRATER ANALYSIS B-2
LOW-ANGLE FUZE QUICK CRATERS (ARTILLERY) B-2
LOW-ANGLE FUZE DELAY CRATERS (ARTILLERY) B-4
HIGH-ANGLE SHELL CRATERS (MORTARS) B-4
ROCKET CRATERS B-6
SHELL FRAGMENT ANALYSIS B-6
SHELLING REPORTS B-9
ARTILLERY COUNTERFIRE INFORMATION FORM B-9
EQUIPMENT B-11

APPENDIX C
FIREFINDER FRIENDLY FIRE AND FIELD EXERCISE MODES

Section I. FRIENDLY FIRE RADAR GUNNERY C-1
FIREFINDER MISSIONS C-1
FRIENDLY FIRE MODE C-1
HIGH-BURST REGISTRATION C-3
IMPACT-PREDICT REGISTRATION (MEAN POINT OF IMPACT) C-3
DATUM-PLANE REGISTRATION (MEAN POINT OF IMPACT) C-3
FRIENDLY FIRE LOG C-4
Section II. FIREFINDER FIELD EXERCISE MODE C-6
USES C-6
SECTION AND/OR PLATOON TRAINING C-6
GUNNERY TEAM TRAINING C-6
SCENARIO DEVELOPMENT C-8
IMPLEMENTING THE SCENARIO C-9

APPENDIX D
VISIBILITY PROFILES

CONSTRUCTING A VISIBILITY PROFILE D-1
CONSTRUCTING THE RADAR VISIBILITY DIAGRAM (OVERLAY) D-4
CONSTRUCTING A HASTY VISIBILITY PROFILE D-5

APPENDIX E
COMMUNICATIONS

RESPONSIVENESS E-1
SECURITY E-1
FIREFINDER RADAR SECTION COMMUNICATIONS E-1
VOICE TRANSMISSION PROCEDURES E-2
DIGITAL MESSAGES E-2
AUTHENTICATION METHODS E-2
DIGITAL NET COMMUNICATIONS E-4

APPENDIX F

FIREFINDER MASK CONSIDERATIONS

DEFINITIONS F-1

TRACK VOLUME F-2

TRACK VOLUME CALCULATION AND SUBSEQUENT ACTIONS F-2

APPENDIX G

TARGET ACQUISITION TAB TO THE FIELD ARTILLERY SUPPORT APPENDIX AND THE RADAR DEPLOYMENT ORDER

Section I. TARGET ACQUISITION TAB G-1

DESCRIPTION G-1

PREPARATION G-1

TARGET ACQUISITION TAB HEADING G-1

MAJOR PARAGRAPHS G-2

Section II. RADAR DEPLOYMENT ORDER G-5

DECRIPTION G-5

RESPONSIBILITIES G-5

HOW TO COMPLETE DA FORM 5957-R G-5

APPENDIX H

FIELD ARTILLERY RADAR SUPPORT REQUIREMENTS

SURVEY H-1

COMMUNICATIONS H-1

ADMINISTRATION H-2

MESS H-2

NON-RADAR MAINTENANCE H-2

RADAR-SPECIFIC MAINTENANCE H-2

SUPPLY H-3

PETROLEUM, OILS, AND LUBRICANTS H-4

SECURITY H-4

METEOROLOGICAL DATA H-5

OTHER SUPPORT H-5

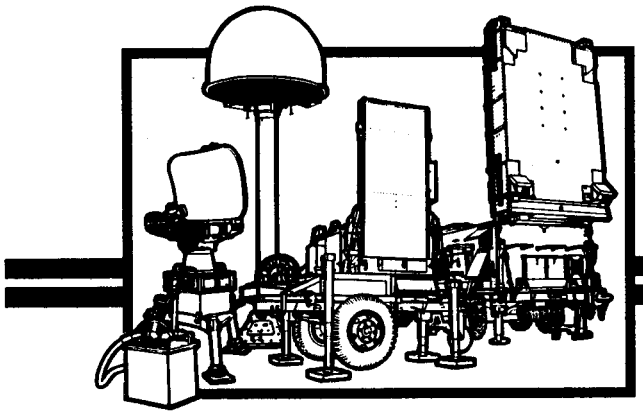

CHAPTER 1
FIELD ARTILLERY TARGET ACQUISITION DOCTRINE AND SYSTEMS

The doctrinal principles described in this chapter are guides for the management and employment of FA target acquisition systems. Local modifications of these principles should be considered in light of their impact on the total TA system. Several tactical radars were designed specifically to meet the targeting needs of the Field Artillery. Current FA target acquisition systems include the AN/TPQ-36 and AN/TPQ-37 weapons-locating radars (WLRs), commonly known as the Fire finder radars, and the AN/TPS-25A and AN/TPS-58B moving-target-locating radars (MTLRs).

TARGETING PROCESS

The targeting process supports the commander's decision as to which targets will be attacked. It helps determine which broad attack option will be used to attack the targets-maneuver, electronic warfare, fire support, or a combination of these. It also helps to determine which particular asset will engage the target. The targeting methodology can be characterized as *decide-detect-deliver.*

The *decide* function of the targeting process provides the priorities that apply to the following:

- The tasking of TA assets.
- Information processing.
- The selection of an attack means.
- The requirement for target damage assessment (TDA).

The *decide* function identifies enemy high-value targets (HVTs) during intelligence preparation of the battlefield (IPB). The HVTs are evaluated in staff estimates, and the enemy courses of action (ECOAs) are war-gamed to determine the most likely one. IPB continues with Threat integration and decision support template (DST) development. Targets whose effective engagement will most greatly affect friendly operations are consolidated into a high-payoff target (HPT) list. This HPT list must be approved by the commander. Once a target has been selected as an HPT, the means of attacking the target is selected. Attack options include maneuver units and their direct fire weapons, attack helicopters, nonlethal systems, and the indirect fire support systems. If indirect fire support systems are used to attack targets, the field artillery is responsible for coordinating the fires.

The *detect* function translates the target priorities developed in the *decide* function into

the intelligence collection plan and TA taskings given in the operation order (OPORD). The G2 or S2 is the principal director of the collection management effort. The effort is focused on the HPT list. Collection management synchronizes the use of all organic or attached TA assets to collect and process information. It then disseminates that information in the form of targets to an attack system.

The *deliver* function is the actual attack of targets by lethal and/or nonlethal means in accordance with the commander's attack guidance. If TDA reveals that the commander's guidance has not been met, the targeting process will continue focusing on that target.

The targeting process is continuous at all levels from corps through division and brigade to task force. Because of their command and control (C2) requirements, ranges, and capabilities, field artillery TA assets are located mainly at division and brigade levels. Target acquisition, however, is still an integral part of the entire targeting process. (See FM 6-20-10 for a detailed discussion of the targeting process.)

ROLE OF FIELD ARTILLERY TARGET ACQUISITION

Field artillery target acquisition plays a key role in the targeting process. Without accurate targeting data, indirect fire weapons (such as mortars, cannons, rockets, and naval guns) are of limited value.

The WLRs organic to FA units are the primary means of locating enemy indirect fire support systems. Tasks for the WLRs should be integrated into the collection plan priorities developed in the *decide* function. If appropriate. tasks should be noted on the operational factors matrix of the DST for special actions at specific points in the battle. (See FM 34-3 for a detailed discussion of the DST and operational factors matrix.)

Tasking for the moving-target-locating radars that are organic to FA organizations should also be an integral part of the collection plan. The range advantage of these MTLRs over the AN/PPS-5 and AN/PPS-15 moving-target-indicator (MTI) radars makes them valuable for target acquisition and/or development. The G2 or S2 should treat the MTLRs much as he does the MTI radars in the collection effort.

TARGET ACQUISITION INTEGRATION IN THE FIELD ARTILLERY SYSTEM

Technology has made the battlefield extremely lethal. To survive, we must find and attack the enemy before he can find and attack us. Timely target acquisition provides the means to ensure coordinated fire support to increase our lethality and, ultimately, our survivability.

The targeting process complements operational planning and the synchronization of combat power. The fire support coordinator (FSCOORD) oversees the routine activity and function of managing most target attack assets. Targeting is enhanced by the formation of the maneuver commander and his principal operational, intelligence, and fire support advisors into an informal functional team. This ensures that target-intelligence-gathering assets belonging to national sources, military intelligence (MI), the US Air Force (USAF), and maneuver forces will be exploited for targeting information.

Direct Support Battalion

To effectively perform its mission, the direct support FA battalion must be able to acquire and attack targets within the supported unit area of interest and/or area of operations.

Many targets reported by members of the fire support team (FIST) will be immediate threats to the supported force. They must be expeditiously attacked. The DS battalion may also have one or more organic or attached AN/TPQ-36 radars. With them, the battalion can either locate and attack mortars and artillery or locate and report the targets to div arty for attack. If the DS battalion has a reinforcing artillery battalion, that battalion may be given command and control of the radar. The DS battalion S2, in close coordination with the DS battalion S3, the maneuver brigade S2, the targeting officer, and the brigade fire support officer (FSO), is responsible for staff supervision of the battalion TA effort.

Division Artillery Tactical Operations Center

The div arty tactical operations center (TOC) supervises the counterfire effort of the division. The TOC therefore has an inherent responsibility for locating and correlating counterfire targets. It uses all sources of targeting information, organic and nonorganic, to locate targets. Although the major targeting effort of the TOC is directed toward counterfire targets, it develops other targets as well.

Field Artillery Brigade Tactical Operations Center

The FA brigade TOC is organized similarly to a div arty TOC. It can use targeting information and intelligence to produce counterfire targets. However, the brigade TOC has no organic targeting capability. Therefore, the FA brigade (bale) headquarters must be augmented with targeting personnel when it is to perform the counterfire mission.

Corps Artillery

The corps artillery uses information produced by the corps intelligence (intel) assets and other sources at echelons above corps (EAC) to produce targets. Also, corps with a light, airborne, or air assault division assigned will have a corps target acquisition detachment (CTAD) for each of those divisions. These are designated as FA detachments (TA) (corps) in the field. The corps will attach its TA assets on the basis of mission needs. The detachment is normally collocated with a division to facilitate training. (See Chapter 5 for detailed information on the CTAD.)

TARGET ACQUISITION SUPPORT FOR COUNTERFIRE

Counterfire gains freedom of action for all friendly maneuver forces. It can be accomplished by the fire support system by both lethal and nonlethal means. Counterfire is not a separate battle. It is inseparably tied to close and deep operations and is part of the overall combined arms fight to achieve fire superiority. While a fine line may exist between counterfire and attack at depth, once a target is capable (that is, within range) of affecting the close fight, its attack is considered counterfire. Intelligence assets must be prioritized to accurately locate targets. Attack assets (such as artillery, mortars, close air support, attack helicopters, naval gunfire, and EW assets) must be brought to bear on the enemy total fire support system.

Counterfire is the maneuver commander's responsibility. The FSCOORD is his primary advisor and executor. Field artillery target acquisition exists to support the maneuver commander's scheme of maneuver during the offense and to protect his most vulnerable assets during the defense. Effective use of target acquisition enhances observation of critical terrain; for example, avenues of approach, potential assembly areas, and possible enemy reconnaissance routes. Maneuver commanders must emphasize that all combat information must be reported into fire support as well as operational channels. The commander ensures proper positioning of TA assets for maximum effectiveness of counterfires, counterpreparation fires, and counter-reconnaissance fires.

WEAPONS-LOCATING RADARS

The AN/TPQ-36 and AN/TPQ-37 WLRs detect and locate enemy mortars, artillery, and rockets quickly enough for immediate engagement by friendly counterfire. They also may be used to observe registrations and help in adjusting fire for friendly artillery units. For specific information on the mission, operation, and characteristics of the Firefinder radars, see Chapter 3.

MOVING-TARGET-LOCATING RADARS

The field artillery has two MTLR systems – the AN/TPS-25A and the AN/TPS-58B. These radars detect, identify, locate, and track moving ground targets. They enable the field artillery to acquire moving targets in enemy territory. For specific information on the mission, operation, and characteristics of the AN/TPS-25A and AN/TPS-58B, see Chapter 3.

CHAPTER 2
FIELD ARTILLERY TARGET ACQUISITION ORGANIZATIONS

Target acquisition units consist of sections with specific capabilities. The current TA organizations are designed around the expected demands of the battlefield. The future AirLand Battle may require a commander to adust his available assets to meet the threat. Consideration must be given to unit integrity and to the technical and logistical needs of these units for them to function successfully on either battlefield.

Field artillery TA units are composed of WLR sections, MTLR sections, survey sections, and target-processing sections. These are controlled by headquarters (HQ) sections or by section leaders performing dual roles. Weapons-locating radarsectlons are organized by mission and equipment differences. WLR sections are equipped with either AN/TPQ-36 radars or AN/TPQ-37 radars. Target acquisition sections can be organized into TABs, TA platoons, TA detachments, and separate sections under a staff organization.

TARGET ACQUISITION BATTERY

Mission

The TAB mission is to detect, identify, and locate enemy forces in the division area of operations or area of interest with sufficient accuracy for attack by friendly units.

Capabilities

The TAB can acquire indirect fire targets by using its organic weapons-locating radars. It can acquire enemy moving targets and provide surveillance with its organic moving-target-locating radar. A counterfire officer and a target processing section are provided to the div arty TOC to help the div arty counterfire officer. To enable TA assets to accurately locate targets, TAB survey sections provide prescribed survey to TAB elements. TAB survey aids the div arty survey section as required.

Organizations

With the implementation of the L-series tables of organization and equipment (TOEs), TABs are organic to heavy and motorized divisions only. The TAB has the organizational structure and key personnel described on page 2-2.

Headquarters Platoon. The HQ platoon consists of a battery HQ, a maintenance (maint) section, and a communications (comm) section. The platoon, led by the TAB commander, coordinates maintenance, supply, administration, and communications support. The **TAB commander-**

- Commands the battery (btry).
- Acting as a special staff officer, provides TA expertise and advice to the div arty commander during the planning and execution of the battle.
- Ensures the battery is deployed and functioning in accordance with the FA support plan.
- Ensures the battery elements receive proper administrative, logistic, and maintenance support.

Survey Platoon. The survey platoon consists of a three-man HQ section, one position and azimuth determining system (PADS) team, and a six-man conventional survey party. The survey platoon can provide fourth-order conventional survey or PADS survey using 5-minute zero-velocity updates. (See FM 6-2, for detailed procedures.) The **survey platoon leader-**

- Supervises the activities of the survey platoon.
- Advises the commander on providing survey to the support unit.
- Provides survey control to TAB elements, in particular the AN/TPQ-37 weapons-locating radars.
- Provides survey control to intelligence and electronic warfare (IEW) assets and battalion survey control points (SCPs) as tasked by the div arty survey officer. The div arty survey officer is located in the survey planning and coordination element (SPCE).
- Ensures that survey missions throughout the division area are performed as tasked by the div arty survey officer.
- Coordinates all survey operations with the div arty SPCE to avoid duplication of effort.
- Performs the duties of div arty survey officer when required.

Processing Section. The TAB processing section (which becomes the div arty target production section) and the div arty HQ order-of-battle (OB) section compose the div arty targeting element. (The OB section is discussed in detail in FM 6-20-2.) The target production section focuses on target information from field artillery TA assets of the div arty. However, it is not restricted to target information from these assets. The section is concerned with the planning, direction, coordination, and control of all field artillery TA assets under div arty control. Specific functions of the target production section are as follows:

- Coordinating the coverage of field artillery TA resources within the division area as required.
- Monitoring the operation of organic and attached field artillery TA sources.
- Correlating target information received from the targeting team of the maneuver command post (CP).
- Developing targets and target indicators.
- Processing target information and passing targets to the fire control element of the FA headquarters controlling counterfire.
- Maintaining the target production map and target cards in a nonautomated targeting systems.
- Requesting target damage assessment.
- Acting as the net control station on the div arty target acquisition/intelligence radio net.

TARGET ACQUISITION BATTERY

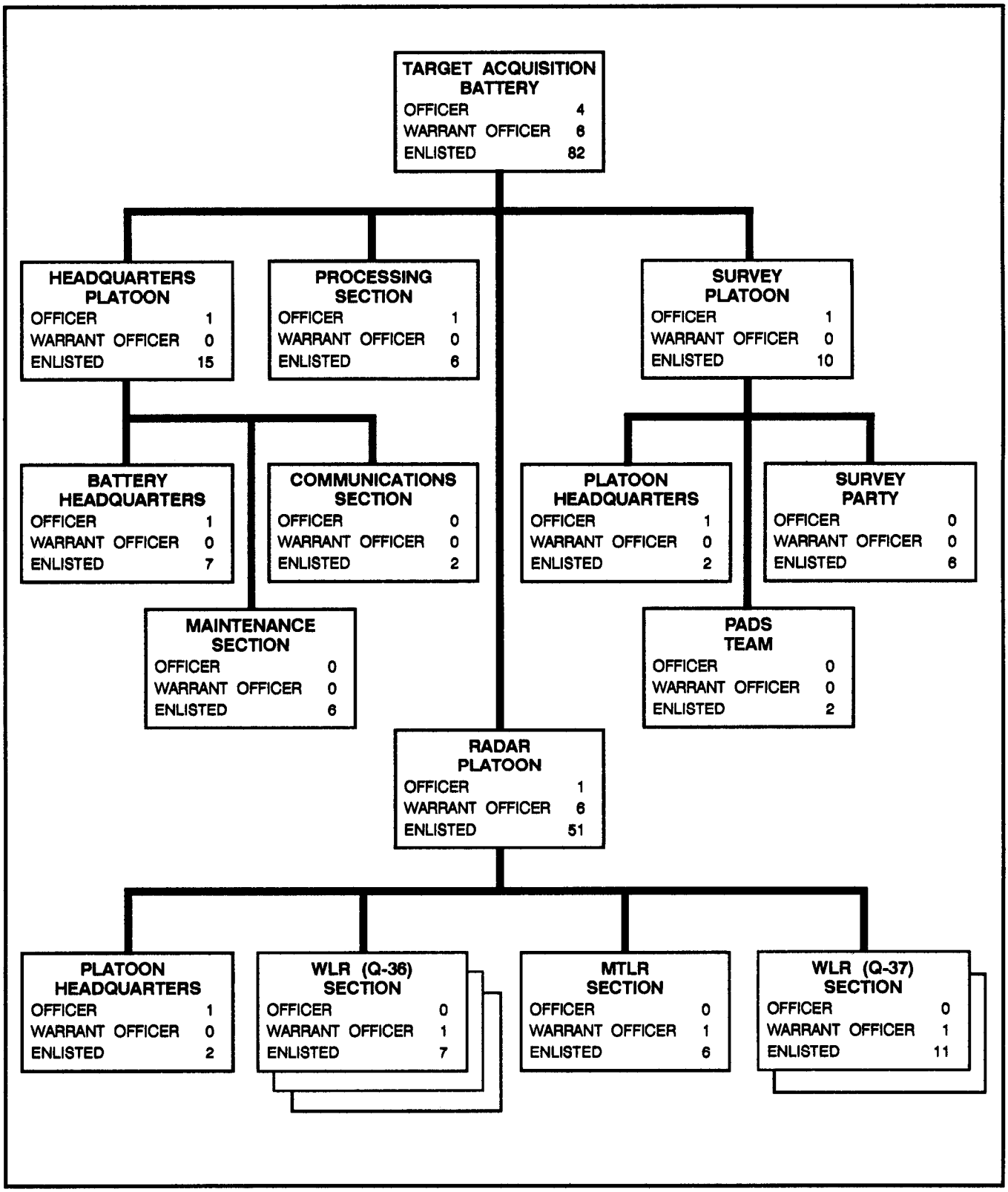

The processing section consists of targeting personnel shown in the table below. The section is led by the TAB counterfire officer. The **TAB counterfire officer–**

- Acts as the counterfire officer when the div arty counterfire officer is absent.
- Supervises the targeting element of the div arty tactical operations center.

> **NOTE:** For manual target processing procedures, see Appendix A. For targeting procedures using an automated means, see FM 6-20-2 and technical manuals on the tactical fire direction system (TACFIRE).

- Ensures targets generated by the targeting element are passed to the fire control and operations elements for action.
- Ensures information from shelling reports (SHELREPs) and mortar bombing reports (MORTREPs) are integrated into the target development process. For a discussion of SHELREPs and MORTREPs and the crater analysis procedures used to develop the information contained in them, see Appendix B.
- Recommends target selection standards for field artillery TA assets.
- Recommends general position areas for field artillery TA resources.
- Ensures that the targeting element reviews and purges target cards, collates the results with other intelligence information, and disseminates the results.
- Ensures that all targeting element maps, charts, and records are kept current.
- Performs the duties of assistant TOC team chief.
- May act as a cueing agent for radars, when required.

Radar Platoon. The radar platoon (plt) consists of two sections of AN/TPQ-37 radars, three sections of AN/TPQ-36 radars, one section of AN/TPS-25A or AN/TPS-58B moving-target-locating radar, and a three-man radar platoon HQ. Each radar section is led by a warrant officer (WO), who ensures his section is deployed tactically. He provides technical guidance on the operation and maintenance of the radars. The radar platoon is led by a platoon leader (LT) and a platoon sergeant (SFC). The **radar platoon leader–**

- Supervises the activities of the radar platoon.

TARGET ACQUISITION BATTERY PROCESSING SECTION PERSONNEL

TITLE	RANK	MOS	NUMBER
Counterfire officer	LT	13D00	1
Targeting noncommissioned officer (NCO)	SFC	13F40	1
Targeting NCO	SSG	13F30	1
Target processing specialist	SGT	13F20	1
Target processing specialist	SPC	13F10	2
Target processing specialist	PFC	13F10	1
			Total 7

- Performs necessary tactical coordination for FA radars in general support (GS) of the division. Areas requiring coordination include communications, movement, positioning, logistics, and administration.
- Provides for the maintenance and training of six TA radar sections.
- Monitors the employment of all TA radars within the division area.
- Advises the TAB commander and counterfire officer on the status of field artillery TA radars.

The **radar platoon sergeant** -

- Helps the radar platoon leader in the performance of his duties.
- Provides input to the div arty counterfire officer to allow construction and updating of the TA capabilities chart.
- Monitors the deployment of the MTLR and WLRs and helps the counterfire officer in recommending general position areas, search areas, and cueing agents.
- Coordinates the distribution of replacement personnel, administrative actions, - and mail from the TA headquarters to the organic radars.
- Facilitates maintenance support for the TA radars.

TARGET ACQUISITION PLATOON OF A SEPARATE MANEUVER BRIGADE

Mission

The mission of the target acquisition platoon is to detect, identify, and locate indirect fire weapons within the separate maneuver brigade area of interest accurately enough for attack by friendly units.

Capabilities

The TA platoon can acquire indirect fire targets by radar. The platoon provides the prescribed survey for all its organic assets within the brigade area and for others as needed. Meteorological (met) requirements are satisfied by the organic met section.

TARGET ACQUISITION PLATOON IN A SEPARATE MANEUVER BRIGADE

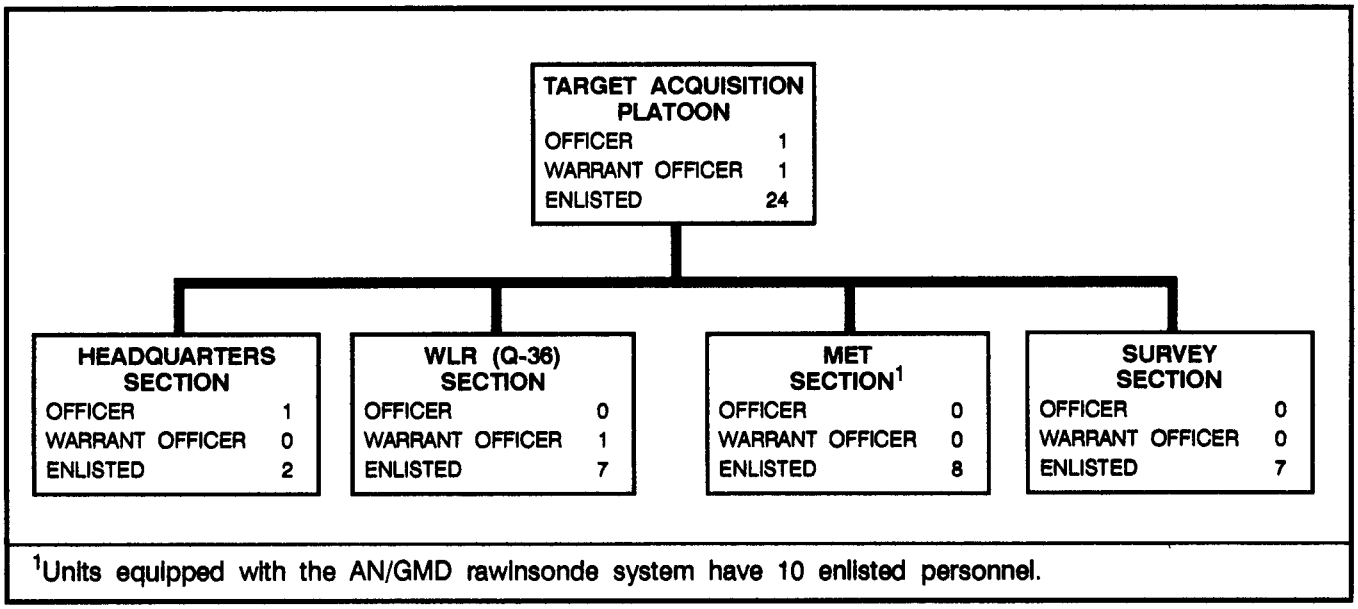

[1]Units equipped with the AN/GMD rawinsonde system have 10 enlisted personnel.

Organization

A target acquisition platoon is assigned to the headquarters and headquarters battery (HHB) of the organic artillery battalion in each separate maneuver brigade. It is organized as described below.

Platoon Headquarters Section. The platoon headquarters section, lead by a 13D ILT, has multiple missions. The headquarters mission is to plan and coordinate survey operations in the brigade area and to direct the target processing functions for the artillery battalion. The platoon leader also acts as a special staff officer to the artillery battalion commander on matters of target acquisition, survey, and meteorology. He is assisted by the chief surveyor (82C40, SFC).

Survey Section. The survey section in a battery-based howitzer battalion consists of one PADS team and one conventional five-man survey party. In a platoon-based howitzer battalion, the survey section has two PADS teams and a three-man conventional survey team. The survey section is required to provide fifth-order survey to the firing batteries and TA assets of the battalion. The section also provides survey support for IEW assets within the brigade area.

Met Section. The met section is equipped with the AN/GMD-l rawinsonde system or AN/TMQ-31 meteorological data system (MDS). The met section provides weather data for the brigade. Ballistic, computer, and target acquisition met messages are produced for the firing units of the brigade and the radar section.

Weapons-Locating Radar Section. The WLR section is equipped with one AN/TPQ-36 radar. The section provides counterfire targets for the artillery battalion and coordinates with the platoon headquarters for target coverage of the brigade area.

CORPS TARGET ACQUISITION DETACHMENT

Mission

The mission of the corps target acquisition detachment is to detect, identify, and locate indirect firing weapons and moving targets within the light division area of interest.

Capabilities

The CTAD can acquire indirect fire targets and locate moving targets. It can also provide survey to its TA assets.

CORPS TARGET ACQUISITION DETACHMENT

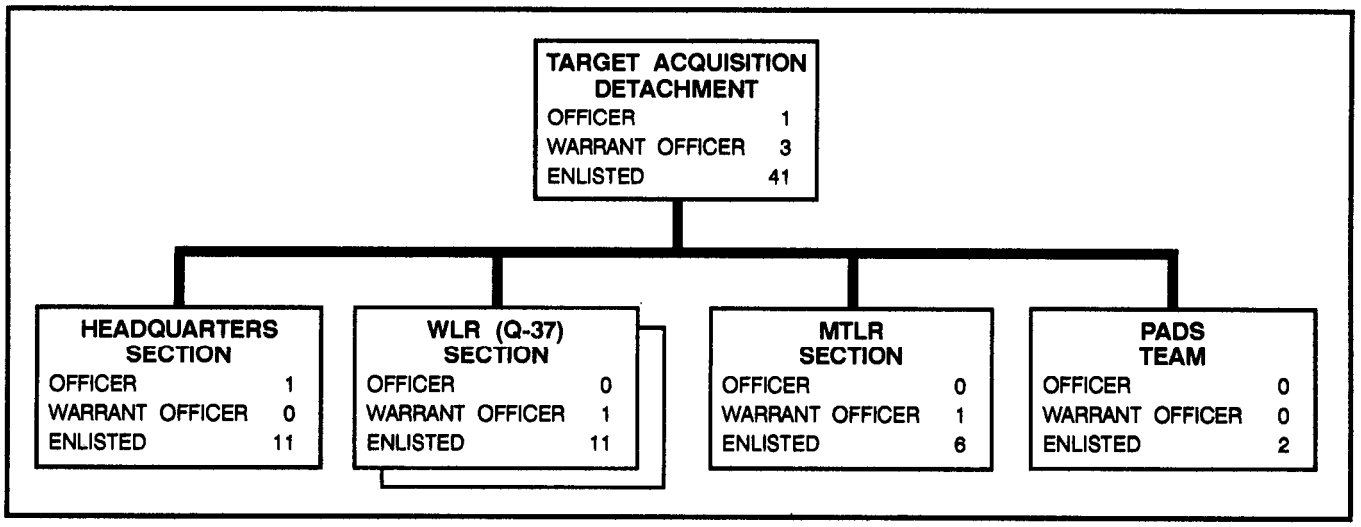

Organization

The CTAD is organic to corps artillery on the basis of one per each light division in the corps. It is designed to be attached to each light infantry, airborne, and air assault division artillery upon deployment. The CTAD consists of a headquarters section, a PADS team, two WLR sections, and one MTLR section. The processing (HQ) section and a counterfire officer (CTAD commander) are provided to each light infantry, airborne, or air assault div arty TOC to help process targets for the division counterfire effort.

Headquarters Section. The detachment headquarters, commanded by a 13D lLT, has multiple missions. It consists of a target processing section and maintenance, supply, administrative, and communications personnel who provide support to the detachment. The detachment commander acts as a special staff officer to advise the div arty commander on TA matters. He also serves as counterfire officer.

PADS Team. The PADS team provides additional survey support to the division artillery.

WLR Sections. Each WLR section has one AN/TPQ-37 radar. The coverage provided by this radar is in addition to the coverage provided by the AN/TPQ-36 radar organic to each DS artillery battalion in the light division.

MTLR Section. The MTLR section has one AN/TPS-25A radar.

NOTE: Chapter 5 provides more detailed information on target acquisition in the light division.

CORPS TARGET ACQUISITION DETACHMENT PERSONNEL

TITLE	RANK	MOS	NUMBER
Commander	LT	13D00	1
Targeting NCO	SFC	13F40	1
Fire support sergeant	SSG	13F30	1
Light wheeled vehicle mechanic	SGT	63B20	1
Supply sergeant	SGT	76Y20	1
Senior radar sergeant	SFC	13R40	1
Detachment clerk	SPC	75B10	1
Target processing specialist	SPC	13F10	1
Unit-level communications maintenance specialist	SPC	31V10	1
TAMMS/PLL clerk	PFC	76C10	1
Light wheeled vehicle mechanic	PFC	63B10	1
Target processing specialist	PFC	13F10	1
			Total 12

LEGEND: TAMMS = The Army Maintenance System PLL = prescribed load list

AN/TPQ-37 WEAPONS-LOCATING RADAR SECTION

The AN/TPQ-37 weapons-locating radar section has a crew of 12 as shown in the table below. Its primary mission is to locate enemy artillery, rocket, and mortar firing positions. This radar can also perform high-burst, datum-plane, and impact-predict registrations as a secondary mission. During combat, the secondary mission should be performed only when absolutely necessary. Radiation time should be reserved for the primary mission. In the friendly fire mode, this radar can also observe rounds. This allows the fire direction center (FDC) to conduct adjust-fire missions. The FDC must, however, compute the adjustment. Tactical and on-order missions will be assigned to the radar by the supported unit. On-order missions must facilitate future operations.

NOTE: For more information on radar-observed registrations, see Appendix C and TC 6-40.

AN/TPQ-37 WEAPONS-LOCATING RADAR SECTION PERSONNEL AND MAJOR EQUIPMENT

PERSONNEL			
Title	Rank	MOS	Number
Target acquisition radar technician	WO	131A0	1
Section chief	SSG	13R30	1
Senior radar operator	SGT	13R20	2
Radar operator	SPC/PFC	13R10	6
Radar mechanic	SPC	13R10X5	1
Power generator equipment repairer	SPC	52D10	1
			Total 12

MAJOR EQUIPMENT	
Item	Number
5-ton truck (M813 or M900-series)	2
2 1/2-ton truck (M35-series)	1
1 1/4-ton truck (high-mobility multipurpose wheeled vehicle [HMMWV])	1
S-250 command shelter (operations control group)	1
Telephone set TA-312	3
Generator set, diesel engine, 60-kilowatt (kw) (MEP-115A)	1
Generator set, trailer-mounted (PU-707 AM)	1
Antenna transceiver group AN/TPQ-37 (mounted on M1048 6-ton trailer)	1
Aiming circle	1
Radio set AN/VRC-90 (with associated communications security [COMSEC] equipment)	3

AN/TPQ-36 WEAPONS LOCATING RADAR SECTION

The AN/TPQ-36 weapons-locating radar section has a crew of eight. (See the table below.) Its primary mission is to locate enemy mortar, artillery, and rocket firing positions. This radar is optimized to detect high-angle indirect fire. It is equally capable of developing accurate grid locations of indirect fire units using low-angle fire. As a secondary mission, the friendly fire mode can be used to observe rounds and perform high-burst, datum-plane, or impact-predict registrations. The fire direction center can use the impact-predict data provided by the radar in friendly fire mode to conduct adjust-fire missions. Use of the radar in the friendly fire mode may be required when no registration data are available, no observer is available, and the mission dictates that the target is a high-payoff target and must be destroyed. The FDC must compute the adjustments. The secondary mission is performed only when absolutely necessary. Radiation time should be reserved for the primary mission. Tactical and on-order missions will be assigned to the radar by the supported unit. On-order missions must facilitate future operations.

NOTE: For more information on radar adjustments, see Appendix C and TC 6-40.

AN/TPQ-36 WEAPONS-LOCATING RADAR SECTION PERSONNEL AND MAJOR EQUIPMENT

PERSONNEL			
Title	Rank	MOS	Number
Target acquisition radar technician	WO	131A0	1
Section chief	SSG	13R30	1
Senior radar operator	SGT	13R20	1
Radar operator	SPC/PFC	13R10	3
Radar mechanic	SPC	13R10X5	1
Power generator equipment repairer	SPC	52D10	1
			Total 8

MAJOR EQUIPMENT	
Item	Number
2 1/2-ton truck (M35-series)[1]	2
1 1/4-ton truck (HMMWV)	1
S-250 command shelter (operations control group)	1
Generator set, trailer-mounted (AN/MJQ-25)	1
Antenna trailer AN/TPQ-36	1
Radio set AN/VRC-90 (with associated COMSEC equipment)	3
Aiming circle	1
Telephone set TA-312	3

[1]Light division WLR sections have 5-ton trucks.

AN/TPS-25A OR AN/TPS-58B MOVING-TARGET-LOCATING RADAR SECTION

The AN/TPS-25A MTLR section has a crew of seven. The AN/TPS-58B radar section has a six-man crew. The mission of either section is to detect, identify, and locate moving ground targets accurately enough for attack by friendly weapons. The section also can vector friendly patrols to specified areas. The technical duties of the radar personnel may differ from those of other sections, but the responsibilities are the same.

AN/TPS-25A AND AN/TPS-58B MOVING-TARGET-LOCATING RADAR SECTION PERSONNEL AND MAJOR EQUIPMENT

PERSONNEL				
Title	Rank	MOS	AN/TPS-25A	AN/TPS-58B
Target acquisition radar technician	WO	131A0	1	1
Section chief	SFC	13R40	1	1
Senior radar operator	SGT	13R20L3	1	1
Radar operator	SPC/PFC	13R10L3	2	3
Power generator equipment repairer	SPC	52D10	1	0
TA surveillance radar repairer	SPC	39C10X5	1	0
		Total	7	6

MAJOR EQUIPMENT		
Item	AN/TPS-25A	AN/TPS-58B
Truck, cargo, 2 1/2-ton	1	1
Truck, 1 1/4-ton (HMMWV)	1	1
Trailer, 1 1/2-ton	1	1
Radio set AN/VRC-90 (with associated COMSEC equipment)	2	2
Digital message device AN/PSG-2	1	1
Radar set AN/TPS-25A or AN/TPS-58B	1	1
Aiming circle	1	1
Telephone set TA-312	2	2
Generator set, 3-kw, 400-hertz (Hz)	2	0
Generator set, 1.5-kw, 28-volt direct current (DC)	0	2

NOTE: Additional skill identifier (ASI) L3 indicates training in MTLR operations. ASI X5 indicates training in Firefinder radar maintenance.

DUTIES OF RADAR SECTION PERSONNEL

The duties and responsibilities of personnel are essentially the same in WLR and MTLR sections. The principal duties of radar personnel are as shown below.

RADAR SECTION DUTIES

Target Acquisition Radar Technician	The TA radar technician– ● Advises the commander and staff of tactical and technical considerations affecting employent of the radar. ● Reconnoiters and selects the site for emplacement of the radar. ● Supervises the activities of all radar personnel in their duties. ● Examines and interprets standing operating procedure (SOP), orders, directives, and technical publications for data pertinent to deployment of radars and related equipment. ● Tests equipment to determine the adequacy of maintenance. ● Reviews and consolidates requisitions for tools, repair parts, technical supplies, and equipment. ● Coordinates technical support (such as met and survey). ● Coordinates logistic and security requirements and provides liaison with supporting unit. ● Commands and directs operation of the section. ● Supervises intermediate maintenance personnel performing maintenance or repair of Firefinder radars or MTLRs.
Section Chief	The section chief– ● Provides completed initialization work sheets to operators. ● Ensures that radar personnel adhere to safety procedures. ● Instructs personnel in radar operation and techniques. ● Plans and supervises hasty survey. ● Organizes and maintains local security and unit defense. ● Helps the TA radar technician. ● Assumes command of radar section in the absence of the radar technician.
Senior Radar Operator	The senior radar operator– ● Provides technical guidance to radar operators. ● Helps reconnoiter and select the site for emplacement of the radar. ● Operates or supervises the operation of the radar, as required. ● Helps the section chief.

RADAR SECTION DUTIES (Continued)

Radar Operator	The radar operator— ● Operates, emplaces, and march-orders the radar and ancillary equipment. ● Performs preoperational checks and system initialization. ● Performs hasty survey. ● Installs and maintains the weapons-locating unit map on the map drum. ● Conducts operator maintenance on the radar and ancillary equipment. ● Camouflages the radar and ancillary equipment. ● Provides local security and unit defense. ● Performs other duties assigned by the section chief.
Power Generator Equipment Repairer	The power generator equipment repairer— ● Repairs and maintains tactical utility and precise power generation equipment and associated equipment in accordance with the appropriate technical manual. ● Provides local security and unit defense. ● Lubricates equipment and changes oil, filters, and air cleaners. ● Cleans equipment and components. ● Tightens and replaces clamps, bolts, and connectors. ● Drains and flushes radiators and fills them with coolant (60-kw generator only). ● Troubleshoots mechanical and electrical systems and components. ● Adjusts to ensure balance or load-phase relationship and effective functioning of equipment. ● Prepares equipment for operation under abnormal conditions. ● Diagnoses and isolates causes of malfunctions. ● Tunes engine, replaces components, and test-operates repaired equipment. ● Tests, uses hand tools to repair, and operates power equipment. ● Prepares maintenance forms, records, and reports. ● Helps in radar operation as required.
Radar Mechanic (TA Surveillance Radar Repairer)	The radar mechanic— ● Helps to operate, emplace, and march-order the radar and ancillary equipment. ● Performs unit maintenance on Firefinder radars (or MTLRs). Detects system malfunctions and isolates them to determine defective components. ● Tests the operation and evaluates the status of the radar and makes adjustments as needed. ● Performs inspection, preventive maintenance, and servicing to establish and maintain the radar in an acceptable operational condition. ● Uses external test equipment as required. ● Replaces the defective items as authorized by the maintenance allocation charts (MACs) in appropriate technical manuals (TMs). ● Maintains work logs and prepares supply requisitions.

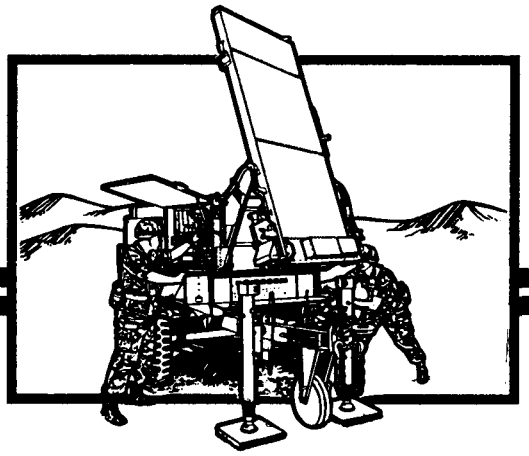

CHAPTER 3

TECHNICAL ASPECTS OF TARGET ACQUISITION EMPLOYMENT

To effectively use the full capabilities of FA target acquisition assets, we must first consider the technical characteristics of the radars themselves and of their employment. The radar operators provide the technical expertise to complement the tactical employment planning done by the FA headquarters controlling the radars. Radar operators must be able to explain technical requirements of the radar to planners during the planning process. Once the plan for use of radars in support of the operation is finalized, radar operators must exploit the technical aspects of the radars not only to maximize their effectiveness but also to enhance their own survivability.

Section I. RADAR SYSTEM CHARACTERISTICS

WEAPONS-LOCATING RADARS

Missions

The primary mission of Q-36 and Q-37 weapons-locating radars is to detect and locate enemy mortars, artillery, and rockets quickly and accurately enough to permit immediate engagement. Their secondary mission is to observe registrations and help the FDC adjust fire for friendly artillery units. The secondary mission should be performed only when absolutely necessary. Radiation should be reserved for the primary mission.

The AN/TPQ-36 Radar

The AN/TPQ-36 is optimized to locate short-range high-angle weapons such as mortars. However, it can also locate artillery and rockets. For planning purposes, the AN/TPQ-36 has a minimum system range of 750 meters and a maximum range of 12,000 meters for artillery and mortars and 24,000 meters for rockets. The antenna electronically scans a horizontal sector from 230 mils minimum to 1,600 mils maximum width. Minimum and maximum detection ranges can be established; however, at least 900 meters difference in maximum and minimum ranges is required, The AN/TPQ-36 can search up to 6,400 mils by using the extended azimuth search function. With extended azimuth search, the computer automatically moves the antenna up to four positions and performs its target location functions.

The highly mobile AN/TPQ-36 is normally located 3 to 6 kilometers (km) behind the

forward line of own troops (FLOT). The AN/TPQ-36 can be emplaced and ready for operation within 20 minutes. It can be march-ordered within 10 minutes. (These emplacement and march-order times do not include the time needed to set up or take down camouflage nets.) For tactical employment considerations, see Chapter 4. For further characteristics of the radars, see the target acquisition radar planning table on page 3-10. For technical operating characteristics and operational limitations during adverse conditions, such as extremely hot or cold weather, see TM 11-5840-354-10-1.

The AN/TPQ-37 Radar

The AN/TPQ-37 radar is optimized to locate long-range low-angle weapons. For planning purposes, it has a minimum system range of 3 kilometers and a maximum range of 30 kilometers for artillery (50 kilometers for rockets). Minimum and maximum detection ranges can be established for the AIVITQ-37, but like those for the AN/TPQ-36, at least 900 meters difference in maximum and minimum ranges is required. The AN/TPQ-37 will also locate short-range high-angle weapons, complementing the AN/TPQ-36.

The AN/TPQ-37 sector of search is from 300 mils minimum to 1,600 mils maximum. Although the AN/TPQ-37 is not equipped with the extended azimuth search function as is the AN/TPQ-36, the antenna can traverse a full circle. The AN/TPQ-37 is normally deployed 8 to 12 kilometers behind the FLOT. The AN/TPQ-37 can be emplaced and ready for operation within 30 minutes. It can be march-ordered within 15 minutes. (These emplacement and march-order times do not include the time needed to set up or take down camouflage nets.) For tactical employment

AN/TPQ-36 WEAPONS-LOCATING RADAR

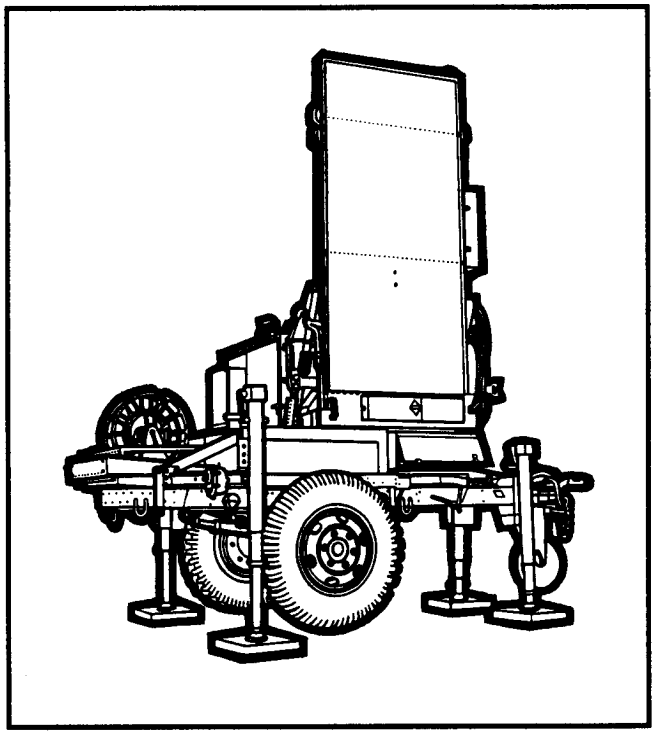

AN/TPQ-37 WEAPONS-LOCATING RADAR

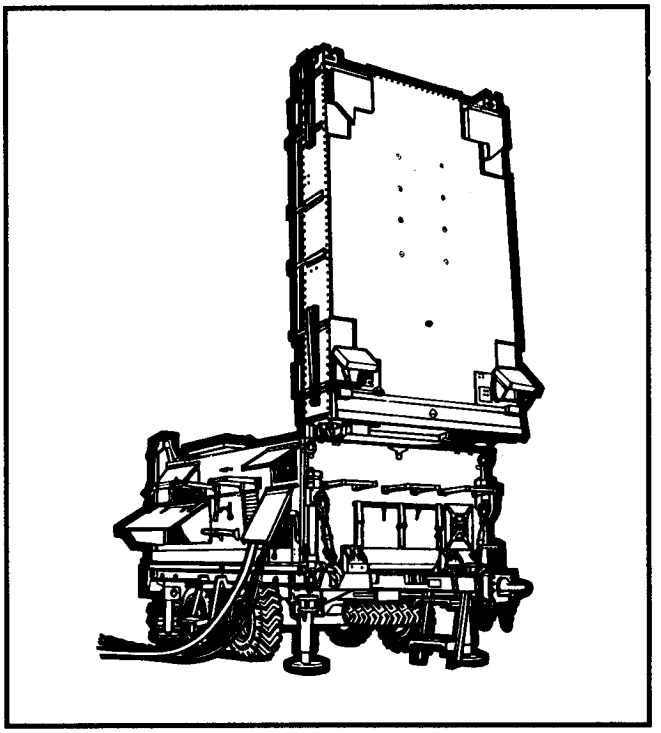

considerations, see Chapter 4. For further characteristics of the radar, see the target acquisition radar planning table. For technical operating characteristics and operational limitations during adverse conditions, such as extremely hot or cold weather, see TM 11-5840-355-10-1.

MOVING-TARGET-LOCATING RADARS

Mission

The field artillery has two MTLR systems–the AN/TPS-25A and the AN/TPS-58B radars. The mission of the AN/TPS-25A and AN/TPS-58B radars is to detect, identify, locate, and track moving ground targets. Through proper positioning and use, the MTLRs give the field artillery the ability to acquire moving targets in enemy territory. MTLRs can also enhance the counterreconnaissance mission by detecting enemy reconnaissance elements. There is one AN/TPS-25A or AN/TPS-58B radar section in each target acquisition battery and corps target acquisition detachment. Both of these radars are Doppler systems. They locate and track targets by changes in the frequency of the return signal produced by movement of the targets. The specific audio return of a target enables the operator to identify it as personnel, a light or heavy wheeled vehicle, or a tracked vehicle. Both MTLRs can be used to vector friendly forces.

The AN/TPS-25A Radar

The AN/TPS-25A is a transportable, battlefield surveillance, noncoherent Doppler radar. To detect a moving target, a noncoherent Doppler radar requires a return signal from a stationary object. The AIWPS-25A requires electronic line of sight (ELOS) to the moving target. It has a selectable beam width of either 36 mils for tracking or 180 mils for surveillance. It also has a search area of 360 or 540 mils. The AN/TPS-25A can locate moving personnel at ranges between 450 and 12,000 meters and vehicles between 450 and 18,280 meters to an accuracy of 100 meters. (The stated accuracy is the maximum system capability and assumes exact survey positioning.) For employment considerations, see Chapter 4. For characteristics of radar, see the radar planning table on page 3-10.

The antenna can be emplaced on the receiver-transmitter or raised on its mast section up to 7.6 meters. The operations shelter can be remoted up to 68 meters from the antenna site. A well-trained crew can emplace the radar on its three mast sections and be ready to operate within 40 minutes. It can be march-ordered within 25 minutes (exclusive of camouflage emplacement time).

AN/TPS-25A MOVING-TARGET-LOCATING RADAR

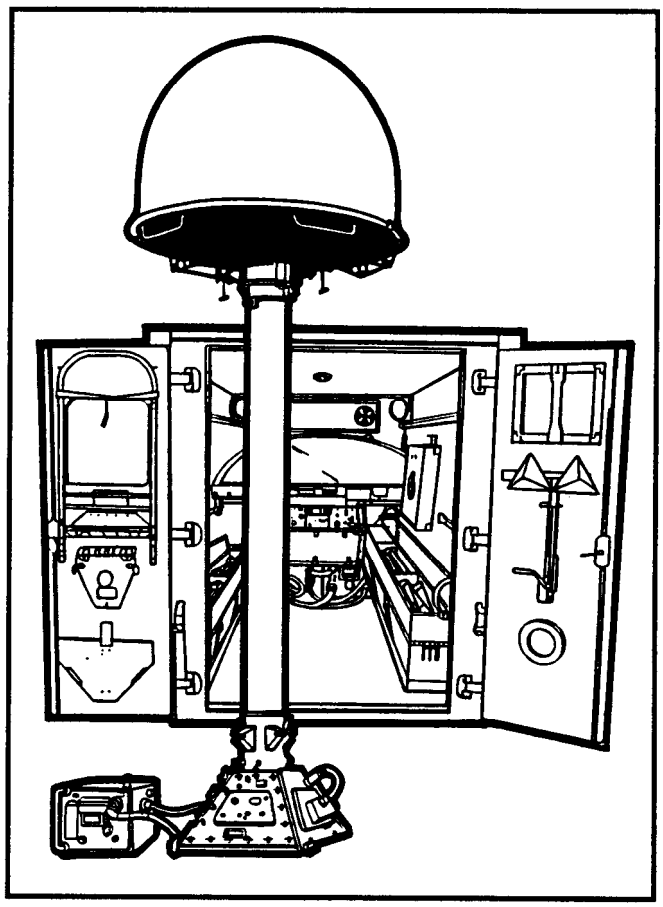

The AN/TPS-58B Radar

The AN/TPS-58B is a lightweight, mobile, coherent Doppler radar. A coherent Doppler radar generates its own reference signal to detect moving targets. The AN/TPS-58B requires electronic line of sight to the moving target. It can locate moving personnel at ranges between 300 and 10,000 meters and vehicles between 300 and 20,000 meters to an accuracy of 50 meters. (The stated accuracy is the maximum system capability and assumes exact survey positioning.) It has a beam width of 75 mils and a variable sector scan of 500 to 2,500 mils. The AN/TPS-58B can automatically track moving targets and predict their future location. A well-trained crew can emplace or march-order the AN/TPS-58B within 15 minutes. The operations shelter can be remoted up to 48 meters from the antenna site. For employment considerations, see Chapter 4. For characteristics of the radar, see the radar planning table on page 3-10.

AN/TPS-58B RADAR

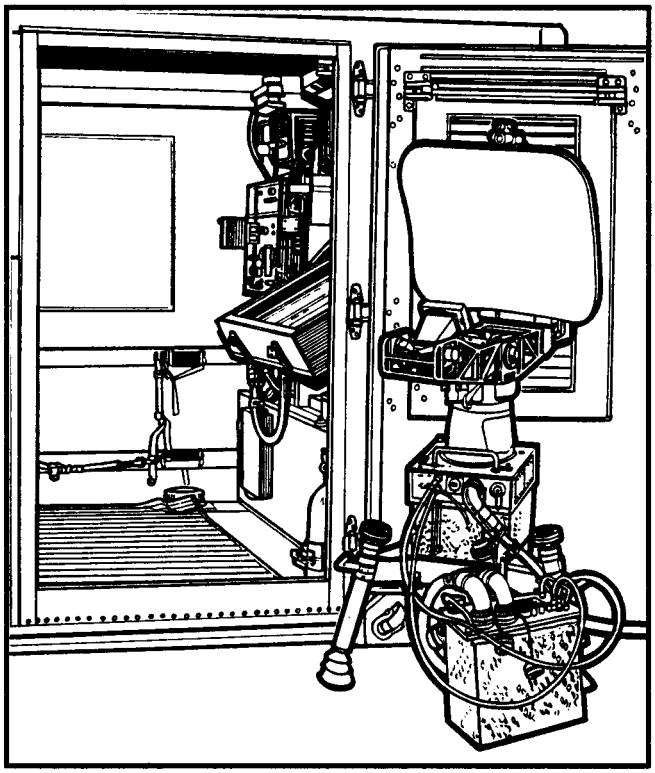

Section II. TECHNICAL ASPECTS OF SITE SELECTION AND POSITIONING

POSITION SELECTION CONSIDERATIONS

This section discusses position selection criteria for the radar section chief. In addition to the technical and tactical factors of the radar, the overriding considerations in selecting a radar site are the factors of mission, enemy, terrain, troops, and time available (METT-T).

The controlling headquarters S2 designates the general position area. The area should be large enough to permit the selection of primary and alternate sites on the basis of technical and tactical considerations. (See Chapter 4 for specific details on the selection of general position areas.)

RECONNAISSANCE

After receiving the general position area, the radar technician conducts reconnaissance before selecting the actual position. If time permits, the technician should make both a map reconnaissance and a ground reconnaissance.

NOTE: Frequently, the MTLR will be emplaced during darkness or periods of poor visibility. Tactical considerations will require a great deal of planning and preparation. As visibility improves, camouflage and concealment will become an important consideration. Cover from enemy fire will be virtually nonexistent for the antenna because of line-of-sight (LOS) requirements.

Map Reconnaissance

The map reconnaissance is made to determine, at least, the following:

- Routes into and out of the area.
- Identifying landmarks that will aid in hasty survey and land navigation to the position.
- Adjacent units that may help establish a defensive perimeter.
- Possible radar sites for ground reconnaissance. These can be determined by constructing and evaluating a hasty visibility diagram for the MTLR. (See Appendix D.)

Ground Reconnaissance

A ground reconnaissance should follow the map reconnaissance to ensure rapid occupation of the selected position. The ground reconnaissance is based on the METT-T factors and the tactical and technical considerations that influence radar operations. During the ground reconnaissance, the radar technician or section chief should –

- Search and mark the area for mines.
- Determine routes of entrance to and exit from the area.
- Determine exact locations for emplacing the radar antenna and shelter.
- Measure and evaluate the screening crest.
- Determine a location for the generator to minimize its effects on operations.
- Determine vehicle locations that will aid in movement into and out of the position.
- Obtain survey control or perform hasty survey.
- Provide for local security (to include camouflage and defense against air and ground attack).
- Select alternate positions.

TACTICAL AND TECHNICAL CONSIDERATIONS

During the actual site selection process, the radar technician or chief of section will analyze the factors of METT-T and consider the following points.

Accessibility

The radar site must be accessible by road, air, or both, depending on mission requirements.

Communications

The communications requirements depend on the mission and therefore will vary. The site must permit establishment of the required communications. The normal means of communications for the radar section is wire and/or radio. Appendix E covers communications for radar sections.

Concealment

Maximum use of natural concealment, such as trees and shrubs, should be considered in selecting a site for the radar. (Concealment must not interfere with the radar beam.)

Cover

When possible, the radar should be emplaced in defilade. This affords protection from hostile fire, The exception to this is the MTLR antenna, which must have line of sight to the target area.

Routes of Approach

The site selected should have more than one covered route of approach. These routes will allow occupation that is unobserved by the enemy. One must consider road conditions, overhead clearances, bridges, and stream fords. See the radar planning table for weights and dimensions.

Security

The radar technician should try to locate the radar site within the perimeter of defense of an

adjacent unit. This will improve his local security. If feasible, the radar section could be augmented with personnel from the supported unit.

Survey

To provide accurate target locations, the FA radars must be sited accurately. Making survey control available near the radar site helps in determining site data.

The primary means of obtaining survey control for radars is the position and azimuth determining system. PADS survey can be supplemented with conventional survey teams. When PADS survey is not available before the radar section occupies the radar site, survey will be provided by a conventional survey team. If common control is not available, the radar section will conduct a hasty survey. The hasty survey will provide the data needed to initialize the radar. If the PADS or conventional survey team arrives after the hasty survey has been done, the data delivered by PADS or conventional survey will be entered into the radar computer. Survey requirements for FA radars are as shown in the table below.

The site altitude accuracy required by Firefinder radars is 10 meters probable error (PE) for AN/TPQ-36 and 3 meters PE for the AN/TPQ-37. The azimuth accuracy provided by hasty survey is ±2.0 mils for Polaris 2, Polaris-Kochab, or simultaneous observation This accuracy is good only for temporary use by the radar section. The location accuracy provided by hasty survey is considered to be approximately 50 meters circular error probable (CEP). Data provided by the PADS or conventional survey will always take precedence over data obtained from a hasty survey.

Slope

The slope of the ground is important for proper drainage and for quick leveling of the antenna.

Area in Front of the Antenna

The area in front of the antenna for the radars should be clear of objects and heavy foliage that extends above the bottom of the antenna. This clear area minimizes the attenuation of the radar beam. The clear area should be 200 meters for the AN/TPQ-36 and 300 meters for the AN/TPQ-37. The ideal site will have a clear area in front of the antenna that slopes downward from the antenna for about 200 (or 300) meters and then gradually rises up to the screening crest. This reduces multipath errors. Multipath errors are errors in target location created when the transmit or return signals travel by more than one path.

Electronic Line of Sight

The overriding consideration in the selection of a radar site for moving target detection is electronic line of sight. Line of sight to the target area for the MTLR and to the projectile on the ascending leg of its trajectory for the WLR is required for antenna location. The radar technician should construct a hasty visibility profile before occupying a site. This can save valuable time by exposing a useless position

SURVEY REQUIREMENTS

MAXIMUM ALLOWABLE ERROR	MTLR	AN/TPQ-36	AN/TPQ-37
Horizontal CEP (meters)	10.0	10.0	10.0
Vertical PE (meters)	10.0	10.0	3.0
Direction PE (mils)	0.4	0.4	0.4

before it is occupied. After occupation, the section must develop a more detailed visibility profile and construct a visibility diagram. A visibility diagram will show the areas that are masked or hidden from the radar. This diagram is then forwarded to the div arty S2 for use in constructing a consolidated visibility diagram of all radars within the division sector. (See Appendix D for details on constructing visibility profiles and visibility diagrams.)

Screening Crest

A screening crest is not a technical requirement for the weapons-locating radar. However, it reduces the radar's susceptibility to detection and jamming from ground-based electronic intelligence (ELINT) systems. Ideally, the screening crest should be in friendly territory and approximately 1,000 meters from the radar. The screening crest should be between 15 and 30 mils in elevation for the AN/TPQ-36 and between 5 and 15 mils for the AIWPQ-37. Also, the difference between the highest and lowest points on the screening crest should not exceed 30 mils. A difference of more than 30 mils will reduce the ability of the radar to provide sufficient vertical track (track volume) in order to make a location.

Aspect Angle

Aspect angle is the angle between the radar antenna and the target path. Since the MTLR is a Doppler radar, a target moving directly toward or away from the radar causes the greatest change in frequency and thus provides a more accurate target location.

Track Volume

Both WLRs must have optimum vertical coverage. Both systems should have approximately 50 mils of elevation track volume to optimize vertical coverage. To ensure the proper track volume, the high or low mask angle difference should not exceed 30 mils. For further information on Firefinder mask considerations, see Appendix F.

Cable Lengths

Once technical aspects of choosing a radar site have been addressed, the lengths of the system cables must be considered. These cables attach the shelter and the generator to the radar. The cable lengths are limiting factors in the actual layout of the radar position area. System cable lengths are shown in the table below.

SURVIVABILITY

Reduce Radiating Time

The shorter time the radar transmits, the less likely it is to be acquired. Maximum continuous transmission time for FA radars should never exceed 2 minutes when an EW threat exists. Transmission time should be kept to the absolute minimum when feasible. The Firefinder survivability flowchart (on page 3-9) should be used in conjunction with the EW threat

CABLE LENGTHS

Radar	Shelter	Generator
AN/TPS-25A	68 meters	30 meters
AN/TPS-58B	30 meters	9 meters
AN/TPQ-36	40 meters	40 meters
AN/TPQ-37	40 meters	32 meters

associated with the IPB as determined at the S2 or G2 level. The flowchart can help to determine a practical way of employing Firefinder according to the tactical situation. The chart allows flexibility in determining how long to radiate (cumulatively) from any position It can also be used to determine how long a particular position can be occupied on the basis of the tactical situation and mission.

Using the Firefinder Survivability Flowchart

The Firefinder survivability flowchart provides the TA radar technician (MOS 131A) and concerned commanders and staff with survivability guidance for radar operations once the ground-based threat against Firefinder has been determined. Use of the chart is to be based on the EW threat associated with the IPB and a commonsense approach to employing Firefinder. It will also be based on the tactical situation and the factors of METT-T. The flowchart is a realistic tool that can be used during the decision process for Firefinder employment. When used properly, the flowchart enables TA personnel to realistically support the maneuver commander by keeping the Firefinder radar in position long enough to maximize its effectiveness. To use the chart, simply begin at the START point, and answer each question posed. Then move through the chart according to your answer.

Ground-Based EW Threat. If you determine that no ground-based EW threat against Firefinder exists, there is no EW limit on radiation time. However, the radar still should radiate only as the mission requires. You should always monitor and update the EW situation.

Optimum Radar Site. If you determine that you have an optimum radar site, the radar can radiate 15 minutes or more. (See cautions on the chart.) Remember that the radiate time should depend on the situation. You must also continue to monitor and update the EW situation.

Optimum Screening Crest Only. If you determine that you have an optimum screening crest only, the radar can radiate for 8 minutes or more. (See cautions on the chart.) Remember, the radiate time should depend on the situation. You must also continue to monitor and update the EW situation.

No Opt/mum Screening Crest. If you determine that an optimum screening crest does not exist the radar can radiate for 8 minutes minus the march-order time or 2 minutes, whichever is greater. For survivability, move at least 500 meters and observe your previous position. Once the survivability move has been made, determine if the new site is optimum. If it is not, do you have an optimum screening crest and was your previous position attacked within a specified number of minutes?

No Optimum Site. If the new site is not optimum, if you do not have an optimum screening crest, and if the previous position was not attacked within a specified number of minutes, you can increase the radar radiate time by 2 minutes. Then make another survivability move, observe your previous position, and so forth. Be cautious. Always monitor and update the EW situation. Always use common sense and consider the factors of METT-T, especially when an optimum radar site and/or an optimum screening crest is not available.

NOTES:

1. The length of cumulative radiation time exceeding 2 minutes In any one position depends in part on the training level of the radar section. For example, the Army training and evaluation program (ARTEP) standard for a Q-36 section to march-order Is 10 minutes. A well-trained section can cut that time considerably and be allowed more time for the radar to radiate.

2. See Chapter 4 for general tactical survivability considerations. The Firefinder survivability matrix (in Chapter 4) is based on the survivability flowchart. It is designed as a quick reference for operations personnel.

FIREFINDER SURVIVABILITY FLOWCHART

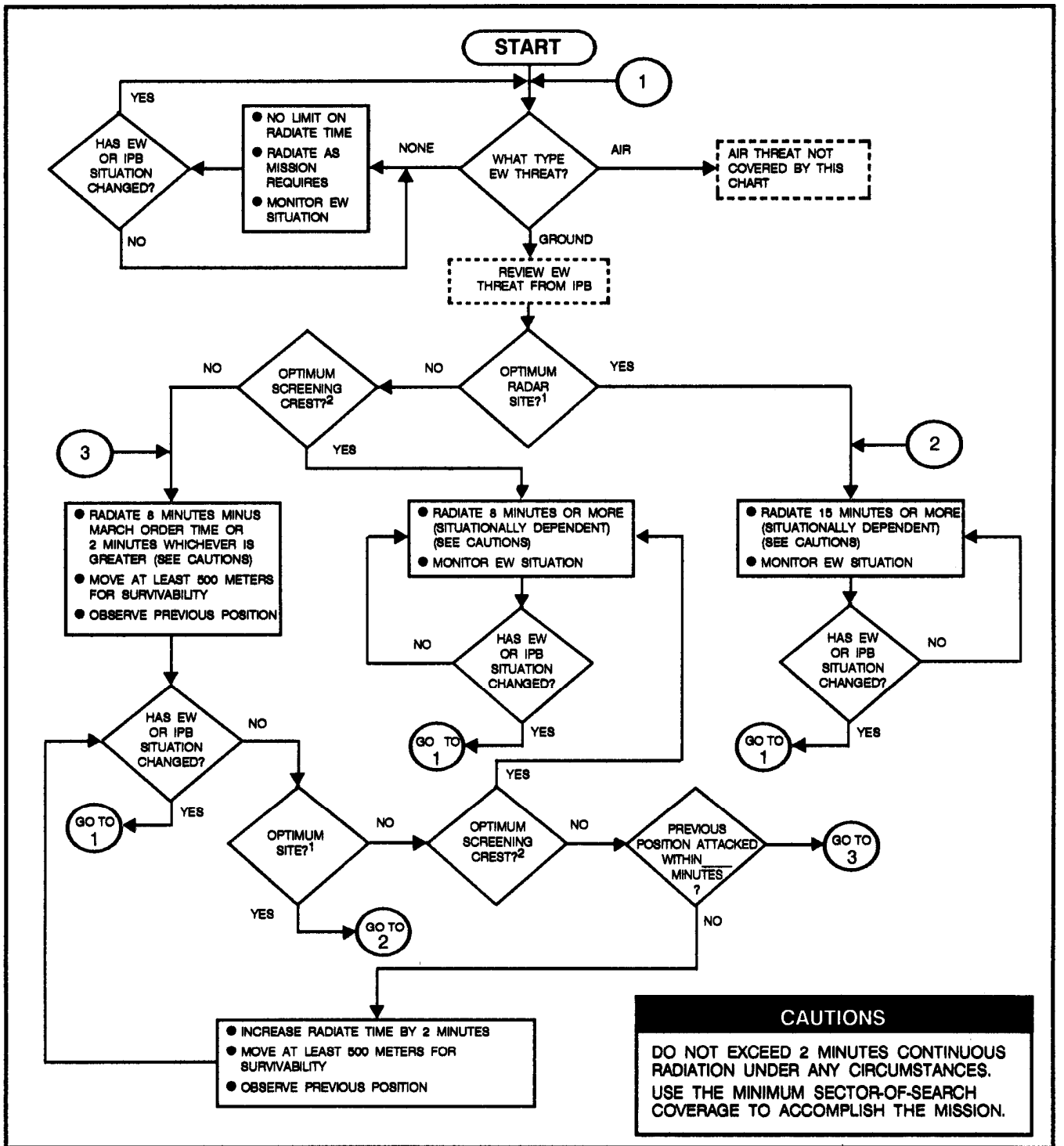

[1]Optimum radar site definition: AN/TPQ-36 screening crest 15 to 30 mils; AN/TPQ-37 screening crest 5 to 15 mils; good tunneling effect in foliage to reduce side lobe radiation.

[2]Optimum screening crest definition: within 1,000 meters of your position and in friendly territory; no crest in enemy territory higher than yours that is within the enemy's normal direction-finding operating range.

TARGET ACQUISITION RADAR PLANNING TABLE

CHARACTERISTICS	WEAPONS-LOCATING RADARS		MOVING-TARGET-LOCATING RADARS	
	AN/TPQ-36	AN/TPQ-37	AN/TPS-25A	AN/TPS-58B
Planning ranges Artillery and mortars Rockets	 12,000 meters[1] 24,000 meters[1]	 30,000 meters[1, 2] 50,000 meters[1, 2]	 (personnel) 12,000 meters (vehicles) 18,280 meters	 (personnel) 10,000 meters (vehicles) 20,000 meters
Azimuth search sector coverage	1,600 mils (6,400 mils in extended-azimuth mode)	1,600 mils	360 or 540 mils (selectable)	500 to 2,500 mils (variable)
Accuracy	Accurate enough for FFE	Accurate enough for FFE	0 to 100 meters	0 to 50 meters
Traverse	6,400 mils	6,400 mils	6,400 mils	6,400 mils
Elevation	15 to 30 mils screen crest	5 to 15 mils screen crest	±265 mils ELOS	±200 mils ELOS
Emplacement time	20 minutes	30 minutes	15 to 45 minutes	15 to 30 minutes
Fording capability	16 inches	30 inches	(depends on prime mover restrictions)	(depends on prime mover restrictions)
Travel weight	(Trailer) 4,440 pounds (Shelter) 2,780 pounds	(Trailer) 17,780 pounds (Shelter) 2,780 pounds	2,033 pounds	2,228 pounds
Dimensions (length, width, and height) Trailer	 170.75 by 84.5 by 94 inches	 234.75 by 96 by 134 inches		
Shelter on 2 1/2-ton truck	264.25 by 97.75 by 123.75 inches	264.25 by 97.75 by 123.75 inches		
5-ton (M813) truck with 60-kw generator	Not applicable	323.25 by 98 by 119.75 inches		
Shelter (alone)	109.25 by 81.5 by 79.75 inches	109.25 by 81.5 by 79.75 inches		
60-kw generator without truck	Not applicable	156 by 86.5 by 63.75 inches		

TARGET ACQUISITION RADAR PLANNING TABLE (Continued)

CHARACTERISTICS	WEAPONS-LOCATING RADARS		MOVING-TARGET-LOCATING RADARS	
	AN/TPQ-36	AN/TPQ-37	AN/TPS-25A	AN/TPS-58B
Q-37 antenna and transceiver groups without trailer	Not applicable	163.5 by 98 by 91.25 inches		
AN/MJQ-25 generator with trailer	171.12 by 82 by 98 inches			
Air transport	External CH-47D UH-60 Internal C-130	External CH-47D Internal C-141	External UH-60 Internal C-130	External UH-60 Internal C-130
Type of targets	Mortars Artillery Rockets	Artillery Rockets Mortars	Personnel Light wheeled vehicles Heavy wheeled vehicles Light tracked vehicles Heavy tracked vehicles	Personnel Light wheeled vehicles Heavy wheeled vehicles Light tracked vehicles Heavy tracked vehicles
Normal distance from forward line of own troops	3 to 6 km	8 to 12 km	1 to 2 km	1 to 2 km

[1]See Chapter 4 for discussion of detection probabilities.
[2]See (C) TM 11-5840-355-10-2.

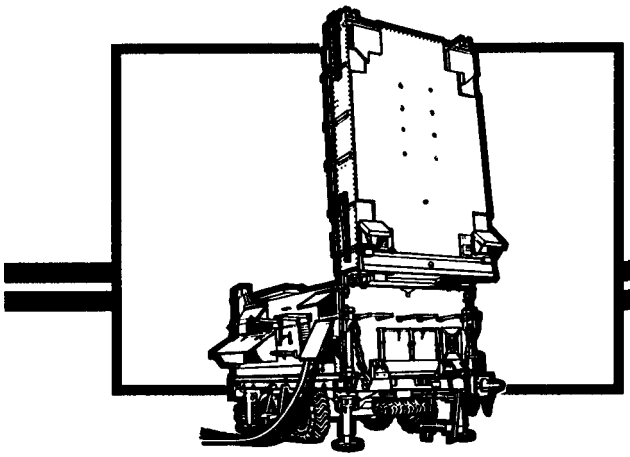

CHAPTER 4

TACTICAL EMPLOYMENT OF FIELD ARTILLERY TARGET ACQUISITION ASSETS

Sound tactical planning is a must to effectively cover the division zone of responsibility with TA assets. Planning must be done at the division and brigade FSEs to use TA assets to best support the maneuver commander's mission and priorities. The FA headquarters that controls the TA assets is responsible for employing them as *planned.*

RADAR EMPLOYMENT

Missions

The primary mission of Q-36 and Q-37 weapons-locating radars is to detect and locate enemy mortars, artillery, and rockets quickly and accurately enough to permit immediate engagement. Their secondary mission is to observe registrations and help the FDC adjust fire for friendly artillery units. The secondary mission should be performed only when absolutely necessary. Radiation should be reserved for the primary mission.

The mission of the AN/TPS-25A and AN/TPS-58B radars is to detect, identify, locate, and track moving ground targets. Through proper positioning and use, the MTLRs give the field artillery the ability to acquire moving targets in enemy territory. MTLRs can also enhance the counterreconnaissance mission by identifying enemy reconnaissance elements.

Operation

The Firefinder radars use a combination of radar technique and computer-controlled signal processing to detect, verify, and track projectiles in flight. They use phased-array antennas and automated signal processing to detect and track multiple projectiles in flight. The computer uses the tracking data to determine the trajectory of each projectile. In the hostile fire mode, the computer extrapolates the trajectory to calculate the firing weapon location and the projected point of impact. The operator then digitally transmits the firing weapon location to the controlling TOC or supported artillery unit. In the friendly fire mode, the radar can be used to observe registrations and area adjust-fire missions. See TC 6-40 for detailed procedures.

Both the AN/TPS-25A and AN/TPS-58B MTLRs are Doppler systems. They locate and track targets by changes in the frequency of the return signal produced by movement of the targets. The specific audio return of a target enables the radar operator to identify it as personnel, a light or heavy wheeled vehicle, or a tracked vehicle. Both MTLRs can be used to vector friendly forces.

Firefinder Detection Probability

The Firefinder radars will support the operational concept and commander's intent

if radar capabilities and limitations are considered in employing the radars. Radar range capabilities must be maximized. Generally, weapons-locating radars find the enemy weapon better if the projectile is large, near, and fired at a high angle. However, accurate detection and location of enemy weapons depend on several factors as described below.

Existing EW Threat. The controlling headquarters, S2, and radar personnel must know the appropriate radar survivability measures. (See the survivability matrix on page 4-17 or the survivability flowchart in Chapter 3.) These measures must be weighed against the maximum detection probability of the radar based on its positioning, radiation time, mask angle, and so forth. The EW threat will dictate how long the radar can remain in position and will therefore affect cueing time. In a low-intensity conflict, there may be no EW threat. If there is no EW threat, the radar could conceivably radiate continuously and detect the maximum targets possible. In low-, high-, or mid-intensity conflict where an EW threat exists, commanders may have to consider the trade-off between survivability and mission. For example, if the threat weapons are defeating our forces and our counterfire is not effective, the commander may decide to extend cueing time to more effectively attack counterfire

Number of Threat Weapons. The number of threat weapons firing will influence radar performance. This is because a number of guns rapidly firing many rounds can quickly fill the radar temporary display queue. Guns firing from new locations will then not be detected unless the operator quickly reduces the backlog in the temporary display queue. Location averaging and automatic censoring can be used to prevent this overloading. With location averaging, each newly detected location is immediately checked for correlation with the average location in permanent storage. If the new location correlates with an earlier detected location in permanent storage, the new location is averaged with the previous location. The averaged location is then put back in permanent storage with the same identification number, and the new location is dropped from the temporary queue. (See TM 11-5840-354-10-1 for detailed discussion.) The automatic censoring mode causes an examination of each round for proximity to previous weapon locations impermanent storage. If a round appears to originate from a previous weapon location and a preselected threshold count of rounds (2-16) from one location is reached, the track is dropped. Automatic censoring and location averaging should be used together for optimum effectiveness. (See TM 11-5840-354-10-1.)

Enemy Weapon Types and Projectile Sizes. High-angle trajectories enhance the probabilities of detection; therefore, high-angle mortars are easier to acquire than low-angle artillery. Also the larger the projectile, the more probable it is to be detected. Rockets are larger than mortars and artillery and therefore are more likely to be detected.

Range to the Enemy Weapon. The closer the radar is to the target, the higher the probability of its detecting and locating the target.

Mask in Front of the Radar. The lower the mask, the higher the probability of detection. (The sooner the radar can detect the projectile coming out of the tube, the more accurate the location will be.)

Positioning. Radars must be positioned to support the commander's intent and to facilitate radar moves that maximize radar operations for the next phase of the battle. Radar must be on time and within range. Questions that should be answered are as follows:

- Can the positioning of the radar be optimized to make maximum use of the radar range capabilities?

- Does the radar position provide for future movement?
- When all radars are in position, do the AN/TPQ-36 and AN/TPQ-37 radars complement each other and are they positioned to cover the maximum effective ranges to detect most of the enemy weapons?

Effective Range Capabilities.

An understanding of the effective range capabilities of the weapons-locating radars is essential to plan for the effective employment of the radars.

AN/TPQ-37 Radar. Actual capabilities of this radar are classified. They are shown in the radar classified technical manual ([C] TM 11-5840-355-10-2). However, the planning ranges used as a baseline to position the AN/TPQ-37 are 30 kilometers for mortars and artillery and 50 kilometers for rockets.

AN/TPQ-36 Radar. The effective range capabilities of the AN/TPQ-36 are based on the accuracy standard of 1 percent of range or 100 meters circular error probable (CEP) (with a 90 percent probability), whichever is larger, The probability of detecting and locating mortars is excellent out to 12 kilometers. The probability of detecting and locating artillery out to 12 kilometers is also excellent. However, at ranges past 12 kilometers, there is a higher probability of detecting mortars than low-angle artillery. Detection of rockets is good out to 24 kilometers because of the large size of the rocket. Generally, increased artillery ranges make the destruction of targets acquired beyond planning ranges a lower probability. For example, the probability of the AN/TPQ-36 acquiring mortar or artillery to the accuracy standard is greatest for distances between 5 and 12 kilometers. Although the AN/TPQ-36 will locate artillery and mortar targets out to 24 kilometers, probabilities of actually detecting those targets to the specified accuracy are lower. The AN/TPQ-36 will locate rockets out to 24 kilometers with a greater probability of detection and accurate location than artillery and mortars because of the size of the projectile.

RESPONSIBILITIES

Fire Support Coordinator

The FSCOORD, along with the division G2 (or brigade S2) and G3 (or S3), develops and recommends–

- High-payoff targets and priorities.
- Target selection standards.
- Target priorities for acquisition.
- Target attack guidance and attack guidance matrix.
- Decision points and time lines for execution.
- FSCOORD measures to expedite attack of targets.
- TDA requirements.

Using input from the div arty S2 and S3, the FSCOORD –

- Recommends radar sectors of search.
- Coordinates positioning for field artillery TA assets.
- Approves the FA support plan, to include the TA tab and radar deployment orders (RDOs). (See Appendix G.)

NOTE: A reproducible copy of DA Form 5957-R (Radar Deployment Order) is at the back of this book. Its use is explained in Appendix G.

The FSCOORD, along with the G2(S2) and G3(S3), monitors execution of the plan through the–

- Div arty S3 for all cannon and rocket systems available to the division.

- Air liaison officer (ALO) for allocated tactical air support.
- Division aviation officer for employment of attack helicopter battalions.
- Division electronic warfare officer (EWO) for EW support.

Division Artillery S3

The div arty S3 has staff responsibility for the control and operation of the div arty CP. He has overall supervisory responsibility for the three main elements of the div arty TOC-operations, fire control, and targeting. Specific duties of the S3 relating to FA target acquisition are as follows:

- Maintain the current status and capabilities of div arty TA assets.
- Prepare the FA support plan to include the TA tab and RDOs provided by the S2.
- Coordinate the implementation of the TA tab.
- Schedule the fires of the firing units.
- Ensure targets are attacked in accordance with the commander's attack guidance.

Division Artillery S2

The div arty S2 has primary staff responsibility for the division FA targeting assets. Aided by the counterfire officer, the div arty S2 develops, maintains, and coordinates plans for employment of these assets. This employment is based on a thorough IPB and evaluation of the factors of METT-T. Employment of the TA assets is coordinated with the G2 and FSE to ensure that it supports the division commander's intent and the corps effort. Factors the S2 must consider include –

- Command and control relationships.
- Sectors of search.
- Zone management.
- Cueing.
- Communications.
- Positioning.
- Survivability.
- Specific offensive and defensive considerations.

Counterfire Officer

The counterfire officer–

- Acts as principal advisor to the S2 for planning, directing, coordinating, and controlling div arty TA assets.
- Recommends coverage and changes in coverage of field artillery TA assets within the division area.
- Monitors the operations of those TA assets.
- Monitors and operates the div arty TA/intel net (frequency-modulated [FM]) (digital); that is, he acts as net control station (NCS).
- Prepares the RDOs for radars controlled by div arty or FA brigade.

Fire Support Officer

The FSO has two critical functions to ensure effective employment of the radars. First, he must coordinate the positioning of the TA assets with the G3 or S3. To do so, the FSO must understand the capabilities and limitations of those assets and the importance of an optimum radar site in terms of accomplishing the mission and enhancing the radar survivability. Second, the FSO must recommend Firefinder zones to the commander during the planning process. These zones focus the radar and supporting artillery on the maneuver commander's TA priorities.

COMMAND AND CONTROL RELATIONSHIPS

The div arty S2 recommends an organization for combat of TA assets to best meet the intent of the division and corps commanders. Command and control of radars can be –

- Centralized at div arty or FA brigade.
- Decentralized by attaching radar sections to a subordinate FA unit.
- A combination of centralized and decentralized control.

Centralized Control

All TA assets may be held under the centralized control of the div arty or its reinforcing FA brigade. Centralized control of assets optimizes coverage to support the division commander's intent. The S2, in concert with the counterfire officer and the FSE, will –

- Designate for each radar a general position area, a sector of search, and Firefinder zones.
- Establish cueing guidance.
- Designate cueing agents.
- Control movement of the radars.
- Designate to whom the radar passes targets.

When the FA brigade has control of TA assets, the div arty should provide its target production section with its associated equipment to the FA brigade. Like the div arty, the FA brigade headquarters does not have an organic target production section and thus does not have target processing capability without augmentation. Regardless of which headquarters exercises control, subordinate battalions may be tasked to provide logistical, survey, and security support because of the dispersal of radars across the division.

Decentralized Control

Radar sections may be attached to DS battalions or reinforcing (R) FA battalions, when available. When the radar sections are attached, the FA battalion S2 controls them executing the same responsibilities as the div arty S2 and counterfire officer. When attached, AN/TPQ-36 sections usually are responsible for covering the supported maneuver brigade zone of responsibility. The brigade FSO coordinates with the S2 mission requirements and priorities based on the maneuver commander's guidance and intent. Normally, control of the AN/TPQ-37 radars and the moving-target-locating radar is retained centrally by div arty. However, these radars also can be attached. Another option is to place a Q-37 radar under the operational control of a multiple launch rocket system (MLRS) unit.

Combination Control

Any combination of centralized and decentralized operational control of radars may be used according to the situation. For example, two Q-36 radars may be attached to the DS battalions supporting the two committed maneuver brigades while the remaining Q-36, two Q-37s, and the MTLR are kept under div arty control.

Regardless of the control options used to employ the radar, logistical support for the radar section is a key factor in its tactical employment. Normally, field artillery TA radar sections are attached to another FA unit for administrative and logistical support. For a discussion of the logistical support entailed by such attachment, see Appendix H.

SECTORS OF SEARCH

Sectors of search are the areas on the battlefield where the WLRs and MTLRs focus their TA capabilities. The sectors of search are determined during the *decide* function of the targeting process, on the basis of a thorough IPB. During the *decide* function, decisions are made concerning what targets should be acquired and attacked, where and when targets are likely to be found, and who can locate

them. Doctrinal employment considerations, in conjunction with templates and intelligence produced in the IPB process, dictate the areas in which the radar searches should be focused.

The location of friendly boundaries and fire support coordinating measures may also affect the assignment of sectors of search. The area given to a specific radar as a sector of search may be affected by the positioning of a common sensor boundary (CSB) as described on page 4-8.

ZONES

Zones are a means of prioritizing radar sectors of search into areas of greater and lesser importance. Zones allow us to orient on the maneuver commander's battlefield priorities. A zone is a geometric figure placed around an area that designates the area as more, or less, important than other areas. Four types of zones can be entered into a Firefinder radar computer. These are critical friendly zones (CFZs), call-for-fire zones (CFFZs), artillery target intelligence zones (ATIZs), and censor zones (CZs). Certain rules must be observed to properly input zones into the Firefinder computer. These rules are outlined in Appendix G. The firing unit locations the radar has developed as targets are displayed for transmission in the order of the priority of the zones in which targets are located. The zone priorities for location identification, from highest to lowest, are:

- Locations of weapons firing into a CFZ.
- Weapons firing from a CFFZ.
- Weapons firing from an ATIZ.

All other weapon firing locations are displayed after locations associated with these zones. All locations other than those associated with a CFZ or CFFZ are formatted by the radar computer as TACFIRE target reports in ATI;CDR format. If the radar has no zones loaded, then all locations are transmitted in the ATI;CDR format. The radar computer will not develop weapon locations that are within a censor zone.

Critical Friendly Zones

A CFZ is an area, usually a friendly unit or location, that the maneuver commander designates as critical. It is used to protect an asset whose loss would seriously jeopardize the mission. When the computer predicts that an enemy round will impact in a CFZ, the location of the weapon that fired the round will be reported by the computer in precedence ahead of all other detections. Any location of a weapon firing into a CFZ will result in an immediate call for fire (FM;RFAF message), unless it is manually overridden by the radar operator. The FM;RFAF message is received by TACFIRE as a Priority 1 message. Thus, a CFZ provides for the most responsive submission of targets to the fire support system.

Call-For-Fire Zones

A CFFZ designates a search area forward of the FLOT that the maneuver commander wants suppressed, neutralized, or destroyed. An area designated as a CFFZ would likely be on a suspected regimental artillery group (RAG) or division artillery group (DAG) position and is closely tied to information developed during the IPB process. A CFFZ provides the second most responsive priority of requests for fire generated by the radar. A target identified in a CFFZ will generate an FM;RFAF Priority 2 message. However, the commander may upgrade this to a Priority 1 message for certain CFFZs. (See Appendix G.)

Artillery Target Intelligence Zones

An ATIZ is an area in enemy territory that the maneuver commander wishes to monitor closely. Any weapons acquired in this zone will be reported to the TACFIRE computer ahead of all target detections except CFZ and CFFZ, but the detections will only result in a target report (ATI;CDR).

Censor Zones

A CZ is an area from which the commander wishes to ignore all target detections. CZs must be used very judiciously, since the computer does not report to the operator a round originating from a CZ. A CZ may be used to ignore a friendly artillery position that, because of its aspect angle to the radar, could be detected as enemy artillery. This situation could occur when an uneven FLOT exists or when friendly units are in enemy territory. The figure below is a graphic example of the use of a censor zone to ignore an artillery unit providing fires when the FLOT is uneven. A CZ may also be used when artillery fires in support of rear operations.

CAUTION

The use of CZs and CFZs at the same time can cause rounds originating from a CZ and firing Into a CFZ not to be detected. It is essential that the radar technician and S2 monitor the combined use of CZs and CFZs closely to ensure that the radar capability of providing target data to protect critical friendly zones is not inhibited.

USE OF A CENSOR ZONE

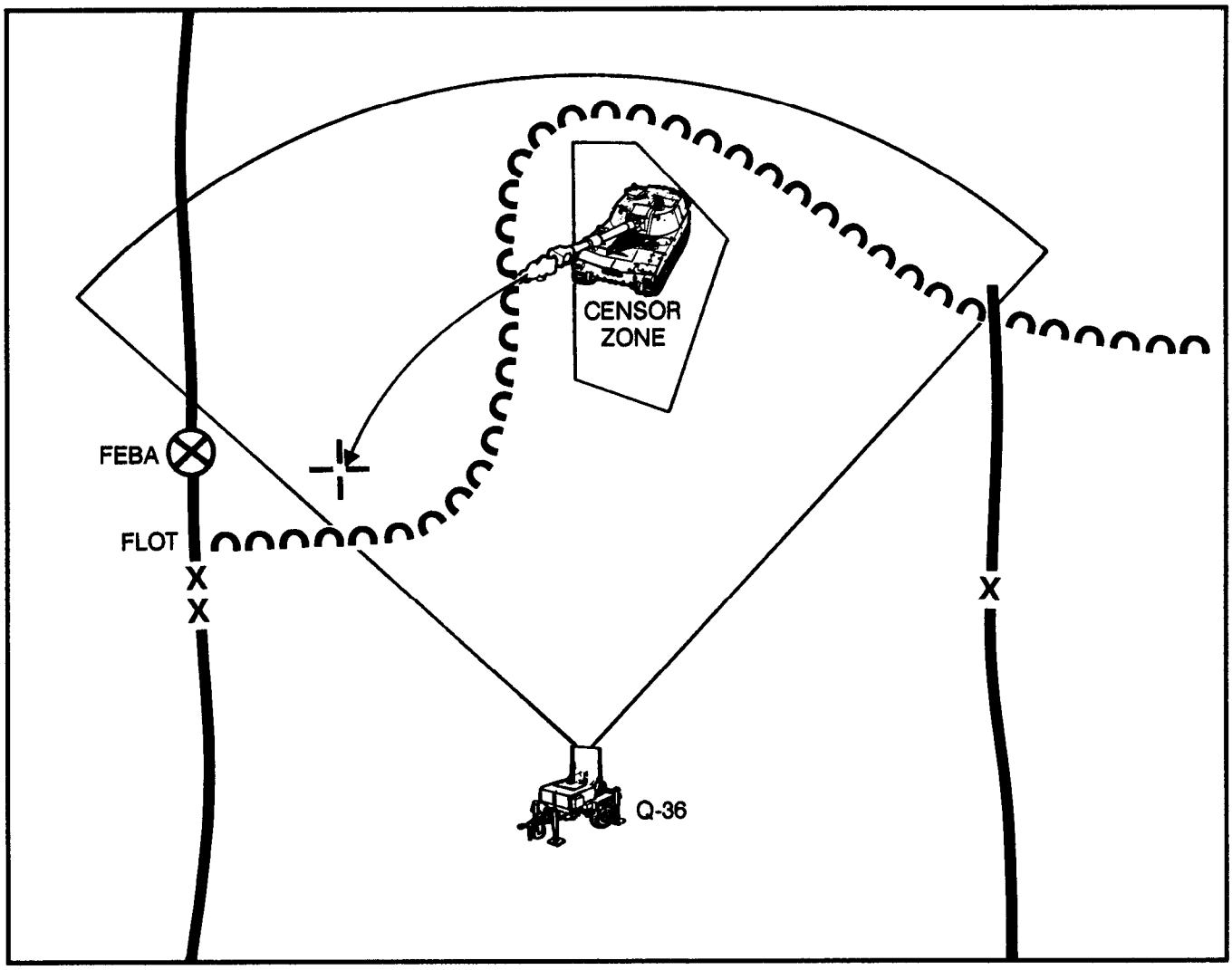

COMMON SENSOR BOUNDARY

Target duplication between Firefinder radars is likely during combat operations. In addition, the sheer volume of targets being passed from the radars will overwhelm the targeting element, especially if the radars are under centralized control. An effective method of reducing the duplication of these targets for attack is to establish a common sensor boundary for call-for-fire zones. The CSB is a line established by the div arty or FA brigade that divides TA areas of search into close and deep areas for the An/TPQ-36 and AN/TPQ-37, respectively. The CSB is established by designating a line beyond which no CFFZs for the AN/TPQ-36 would be established. The AN/TPQ-37 would not establish any CFFZs short of this line. All radars could process targets generated for attack from their CFFZs through the same or different headquarters, and none would be duplicated. When the radars are used in this way, the maximum range capabilities of the radars are not restricted. The CSB is not a fire support coordinating measure, although the CSB may coincide with a coordinated fire line (CFL). The CSB is only a tool used by FA TA controlling headquarters to maximize effectiveness of radars.

In determining the placement of the CSB, factors considered are:

- Range of the FA attack systems.
- Available attack assets.
- Effective ranges of TA assets.
- Likely enemy indirect fire weapon deployment areas, such as RAG and DAG positions, developed through a thorough IPB.
- Availability of ammunition.

When a radar is required to move for survivability, the CSB may have to be adjusted to ensure optimum radar coverage. For example, if the Q-36 moves, the Q-37 will have to cover the Q-36 area of responsibility until the Q-36 is in position. The figure below shows a typical CSB.

COMMON SENSOR BOUNDARY

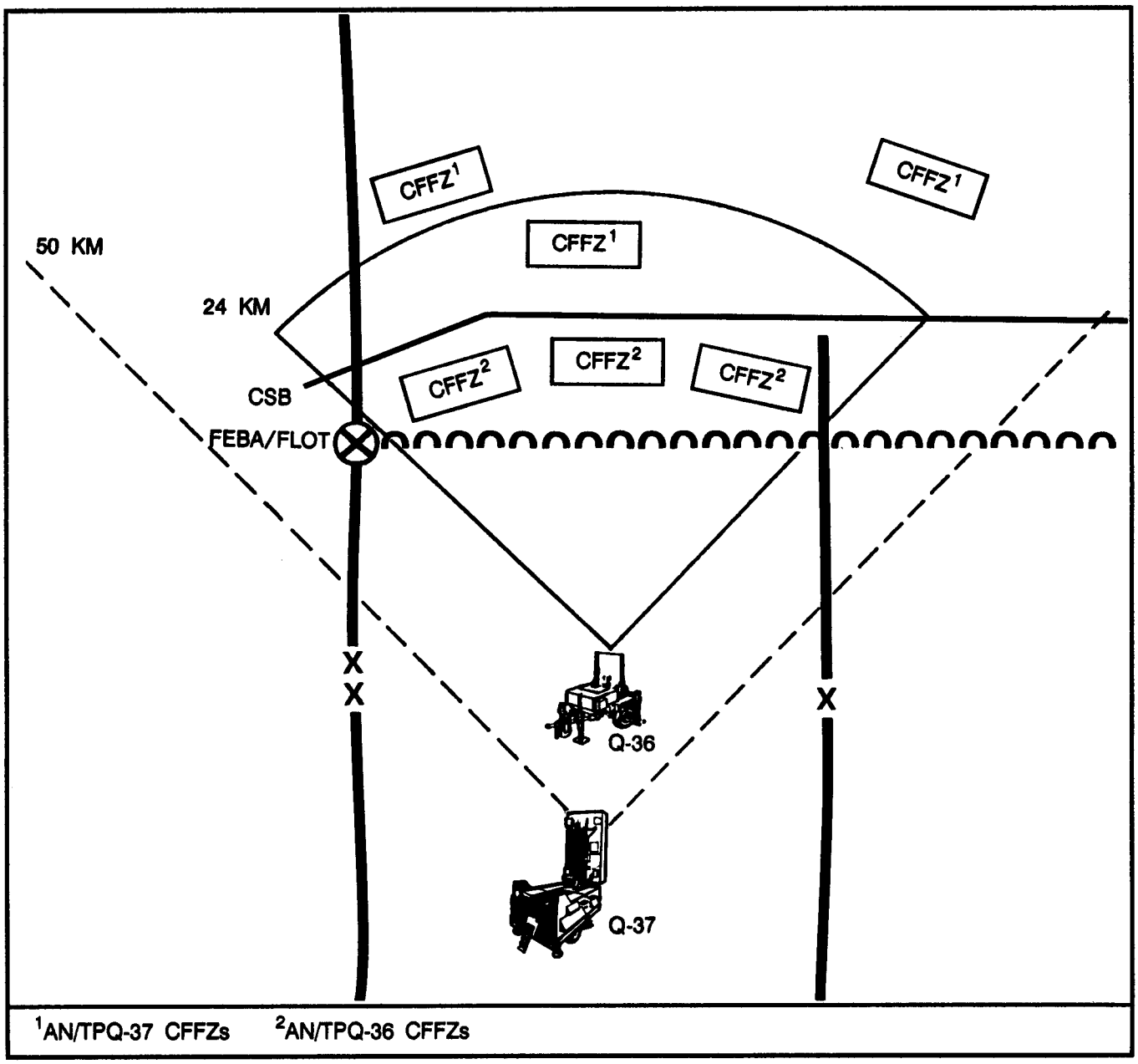

[1]AN/TPQ-37 CFFZs [2]AN/TPQ-36 CFFZs

CUEING

Cueing is the process designed to prompt or notify, the radar to begin radiating to acquire hostile fire. Determining when and how to best cue the radar is one of the most difficult planning decisions. Although individually scheduled cueings may be random preplanned cueing "schedules" are often ineffective and unnecessarily subject the radars to enemy direction-finding and analysis. Radars can be cued more effectively by designated cueing agents who operate under specific cueing guidance. The cueing guidance is designed to fully exploit the radar potential and still minimize or eliminate unnecessary radiation. The situation will dictate who best can cue the radar and the specific conditions under which it should be cued.

Possible cueing agents may include:

- Combat observation/lasing teams (COLTs).
- Forward observers (FOS).
- Aerial fire support observers (AFSOs).
- Rear area CPs (such as those in brigade or division support areas).
- Brigade- or division-level IEW systems.

Cueing of radars may be centralized, with all requests going through the radar controlling headquarters, or it may be decentralized. For decentralized cueing, the controlling FA headquarters will establish cueing guidance, to include authorized cueing agents, communications links, and conditions under which the radar may be cued. At maneuver brigade and above, where a written operation plan (OPLAN) or OPORD is used, the cueing guidance should be in the TA tab to the FA support plan. At maneuver battalion or task force (TF) level, the radar cueing instructions are given in the radar deployment order. (See Appendix G.)When cueing agents other than FA assets are designated cueing guidance for them should be given in the basic order as coordinating instructions or under specific tasks to subordinates.

Authorized cueing agents should be restricted to those units or installations the commander deems most critical to his operations. The responsiveness of the radar in detecting incoming fires will be further improved by tying the authorization to cue a radar with the establishment of a CFZ, instead of either establishing a CFZ or designating a cueing agent alone.

Communications links used to cue radars should be defined in the cueing guidance. Voice radio nets that are normally monitored by the radar are the most responsive means. Because this link is usually an FA unit command net cueing agents should restrict the time they use the net. Agents should use the net only the time required to initially establish communications and then to cue the radar as necessary.

Special conditions under which the radar should be cued must be passed to the cueing agents. A hostile artillery or mortar attack of very short duration that is observed by the cueing agent but does no serious damage should not constitute cause for cueing the radar. The criterion for cueing a radar should be damaging fires received during critical operations.

Fire support and/or maneuver rehearsals should include practicing the activation of cueing agents by use of appropriate cueing guidance. Clarification of cueing guidance or designation of other cueing agents, if required, should be issued at that time.

Cueing must be based on real-time information so that the radar has a high probability of tracking projectiles when it is turned on. An example for real-time cueing is shown on the following page.

EXAMPLE

On the basis of the brigade mission and the commander's intent, the brigade FSCOORD recommends to the brigade commander the designation of the brigade TOC, the armored TF assembly area, and the brigade support area as CFZs. The armored task force FSO, the brigade FSO, and the forward support battalion S3 are designated as cueing agents and given specific cueing guidance. Each cueing agent establishes communication with the designated radar section. He also establishes internal alert procedures within his CFZ with the appropriate commanders.

The armored TF assembly area receives hostile artillery fire (1). The task force FSO immediately cues the radar (2).

The radar responds to the cue, locates the position of the hostile artillery firing on the task force (3), and generates a request for fire (4).

The FA battalion FDC executes the attack in accordance with the commander's attack guidance (5).

REAL-TIME CUEING

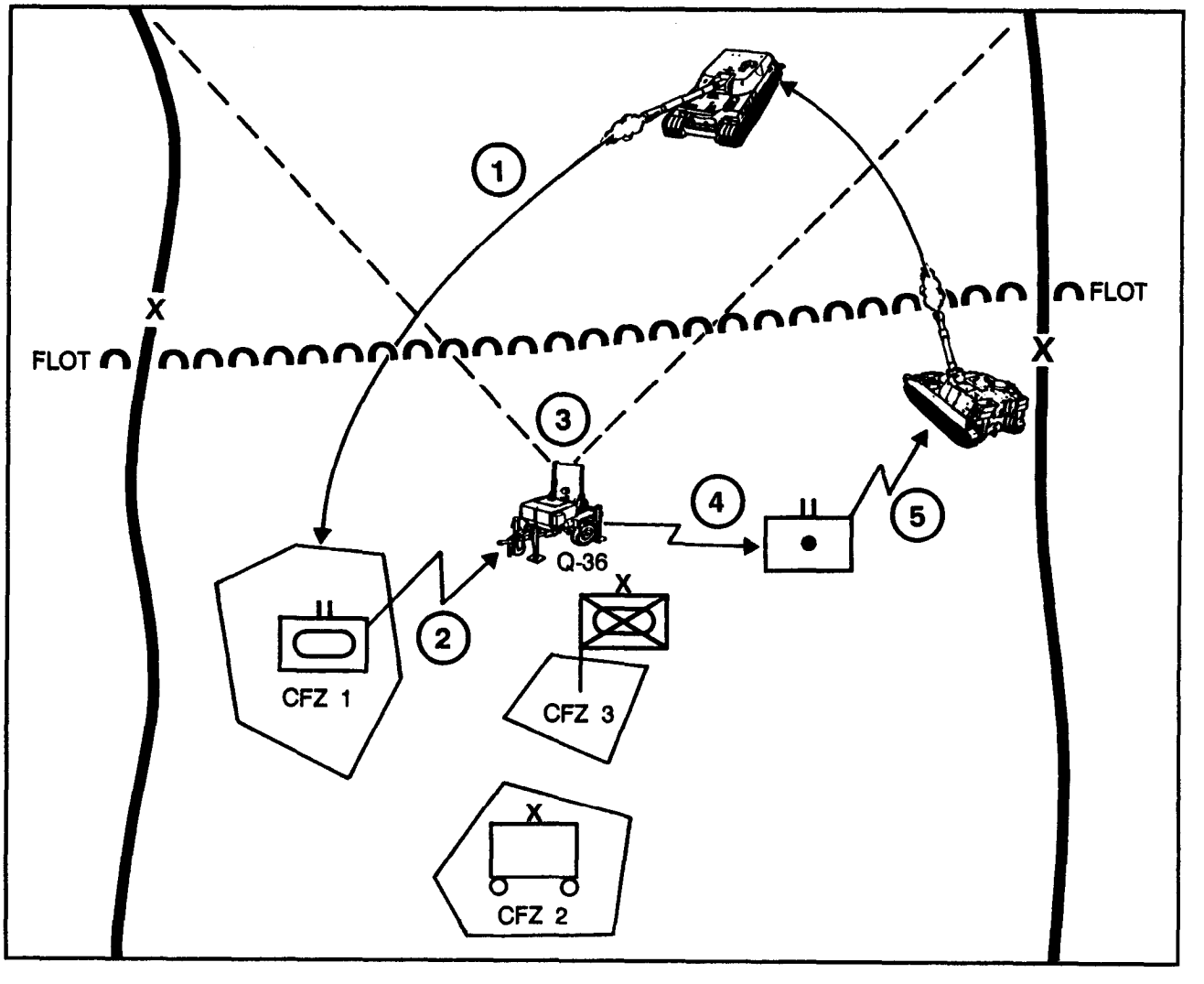

COMMUNICATIONS

The preferred means of communication between a radar and the supported unit is wire. FM radios require electronic line of sight. Messages from Firefinder can be sent to any unit equipped with TACFIRE, a battery computer system (BCS), a fire direction system (FDS), or a digital message device (DMD). However, messages from an MTLR are normally sent by voice unless the radar is provided with a digital communications capability.

A Firefinder radar in general support should operate in two radio nets. The div arty TA/intel net is the digital radio net for Firefinder. The second Firefinder radio will operate in the div arty command net for voice traffic. A Firefinder that is attached to a battalion should operate digitally in one of the fire direction nets as directed by the S3 and in the battalion command FM voice net. Firefinder radars controlled by the FA brigade will use the TA/intel net to pass targets digitally and the command net for voice transmissions.

An MTLR in general support and within radio range of div arty should operate in and pass targets on the div arty TA/intel net. If the MTLR is attached or is out of radio range with the div arty TOC, it should pass targets as directed. Normally, this is done through the nearest FA unit.

POSITIONING

A thorough analysis of the factors of METT-T will influence the selection of a general position area and the radar sector of search. The FSE and the controlling FA headquarters must both make this analysis. Both must also consider the technical and tactical considerations and the survivability factors involved in employing TA assets.

METT-T Considerations

A thorough analysis of the factors of METT-T will dictate which of these factors are most and least important. Information derived from this analysis is recorded on the RDO and sent to the radar section. (See Appendix G.) The radar technician reconnoiters the general position area and makes the actual site selection.

Mission. TA assets must be emplaced where they can accomplish their mission.

Enemy. The enemy situation and capabilities greatly influence the employment process. A thorough intelligence preparation of the battlefield will help TA planners in orienting TA assets. The IPB process should indicate to the TA assets where to look and what to look for. If the enemy is on the offensive, the radars should be emplaced farther from the FLOT than might be necessary if the enemy is on the defense. If the enemy is using electronic warfare, the radar will need numerous alternate positions to prevent location. The radar section will make its moves on the basis of the Firefinder survivability flowchart shown in Chapter 3.

Terrain (and Weather). Terrain can affect movement, concealment, communications, and positioning. In mountainous terrain, selecting general position areas to take full advantage of the Firefinder radar range and capabilities is difficult. It will also be difficult to find a position with an optimum screening crest. On the other hand, flat open terrain could make concealment difficult. Heavy rains, heavy snows, sandstorms, and dust storms degrade the capabilities of Firefinder by decreasing the probability of location. Such severe weather conditions have less effect on the AN/TPQ-37. Heavy rains or melting snow may make some terrain impassable for Firefinder radars, particularly the heavier AN/TPQ-37.

Troops. The size of the area to be covered and the number of radars available for search affect employment. A DS battalion could have

two radars attached to it rather than one. This would allow more flexibility in selecting position areas. Firefinder radars should be emplaced within effective and practical communications range of the unit they support. Whenever possible, wire communications should be established.

Time Available. Planners must consider how much time is required for reconnaissance, liaison, movement, occupation, and establishment of survey points needed in the position area.

Technical and Tactical Considerations

As the target acquisition planner selects a general position area for a radar, he must be aware of the technical and tactical considerations that influence his selection. Some of these considerations cannot be fully determined by the planner and can be applied only by the radar technician as he makes the actual site selection.

System Capabilities and Limitatlons. The capabilities and limitations of the radars are very important in selecting positions to employ them. The most technically perfect site is worthless if the radar cannot perform its mission. Some of the capabilities that should be considered in the employment of radars are listed in the radar planning table in Chapter 3. Some of the system limitations that should be considered are as follows:

- Radars are active emitters. The Firefinder radars have several electronic counter-countermeasures (ECCMs) designed into the equipment. However, the enemy may still detect, jam, or seek to destroy the radar. Because of its capabilities, the radar could well be a high-priority target for enemy EW operations.
- The radar mobility depends on the serviceability of the prime mover and the terrain it must traverse.
- The radar must be carefully positioned to avoid visual or infrared detection. The sheer size of the radar makes it difficult to camouflage and conceal. The noise of the generator must also be considered in employing the radars.
- Because of the lengths of the radar cables, the control shelter, generator, and radar cannot be dispersed enough to reduce their vulnerability to enemy indirect fire.
- A Firefinder radar cannot indicate to the operator the type of weapon that has been detected. Also, the radar cannot indicate the weapon trajectory, that is, low angle or high angle. The AN/TPQ-36 reports all targets as mortars, regardless of actual weapon type. The AN/TPQ-37 reports all targets as artillery, regardless of actual weapon type.
- An MTLR cannot distinguish between friendly and enemy personnel or equipment.

Electronic Line of Sight. For the MTLRs, electronic line of sight to the target is necessary to detect and locate the target. The primary way of achieving ELOS is by placing the radar on prominent terrain. The AN/TPS-25A can be installed on one, two, or three mast sections. The antenna is 7.6 meters above the ground when the radar is installed on three mast sections. The Firefinder radars do not require electronic line of sight to the weapon. However, ELOS to the projectile in the ascending leg of its trajectory is essential for target location.

Aspect Angle. When Firefinder radars conduct friendly fire missions, the aspect angle (angle T) between the radar and the firing unit should be less than 1,200 mils. The MTLRs can detect and locate moving targets only when a change in the target range is apparent.

Other Radar Sets Operating in the Area. If other radars are operating in the same area, care must be taken to ensure that the antennas do not face each other. This is especially true of radars of the same type that operate on the same frequency.

Cover. Radars are "soft" targets and offer only limited protection for either the personnel or the equipment of the section. Therefore, the radar section should make maximum use of all natural cover available. Firefinder radars should always be placed in defilade to protect the section from enemy direct fire and observation. MTLRs should be used mainly during periods of limited visibility.

Concealment. Because of the size and quantity of the equipment and vehicles organic to the radar section, it is very important to select general position areas so that natural concealment can be used. This is especially true for the AN/TPQ-37 section, because the antenna is more than 22 feet high when fully erected and is very hard to camouflage. The edge of a tree line is the most desirable location for a radar site. Here, the radar antenna trailer with antenna-transceiver group can be placed on the outer edge of the tree line and camouflaged to blend into the background of trees. All other equipment and vehicles can be placed in the woods and hidden from enemy view by camouflage nets, trees, and other types of camouflage. Camouflage should be a continuous and automatic function of the radar section. It should begin as soon as the reconnaissance party first checks the site; it should end when the radar section finally departs the site. The radar technician should choose the exact radar site to make concealment of the radar section easy.

Routes of Approach. The radar site should have more than one route of approach. These routes of approach should be accessible by vehicle, free from enemy observation, and capable of being guarded by a minimum number of personnel. In selecting a radar site, the radar technician must consider road construction, overhead clearances, bridges, fords, tunnels, and obstacles.

Security. Because a radar section is so small, it is almost impossible for the section to provide effective local security for itself in a tactical situation. For this reason, the radar site should be located near the defensive perimeter of another unit, if feasible, or the radar section could be augmented with personnel from the supported unit. Either option eases the local security requirements for the radar section.

Survey. It is critical that TA assets are on common control with delivery assets. The S3, the div arty survey officer, and the FA battalion or TAB reconnaissance and survey officer (RSO) must include TA assets in the overall survey plan.

Screening Crest. A screening crest is not essential for locating hostile weapons with Firefinder radars. However, it does increase survivability of the system by serving as a defense against enemy observation, direct fire, and electronic countermeasures (ECM). A radar site must be selected with care to ensure that the screening crest is high enough to protect the radar section from the enemy yet low enough to allow the radar to track an enemy projectile on its ascending trajectory. The maximum recommended vertical angle (mask angle) is shown in the table and figure on page 4-15. The TA technician should try to select his radar site so that the screening crest is within 1,000 meters of the site. He should also ensure that the screening crest is always in friendly territory. By using the formula shown in the figure on the following page, the TA technician can perform a map reconnaissance and estimate his mask angle for the future position.

Slope of the Ground. The slope of the ground is important for two reasons — for drainage and for leveling the trailer and antenna-transceiver group. The slope of the ground must be less than 120 mils (7°) to permit leveling the trailer and antenna-transceiver group, which will not function properly without leveling. Drainage also must be checked to ensure that radar equipment will not become stuck during heavy rain.

SCREENING CREST MASK ANGLES

RADAR	MINIMUM	MAXIMUM	OPTIMUM
AN/TPQ-36	15 mils	30 mils	22 mils
AN/TPQ-37	5 mils	15 mils	10 mils

ILLUSTRATION OF MASK ANGLE

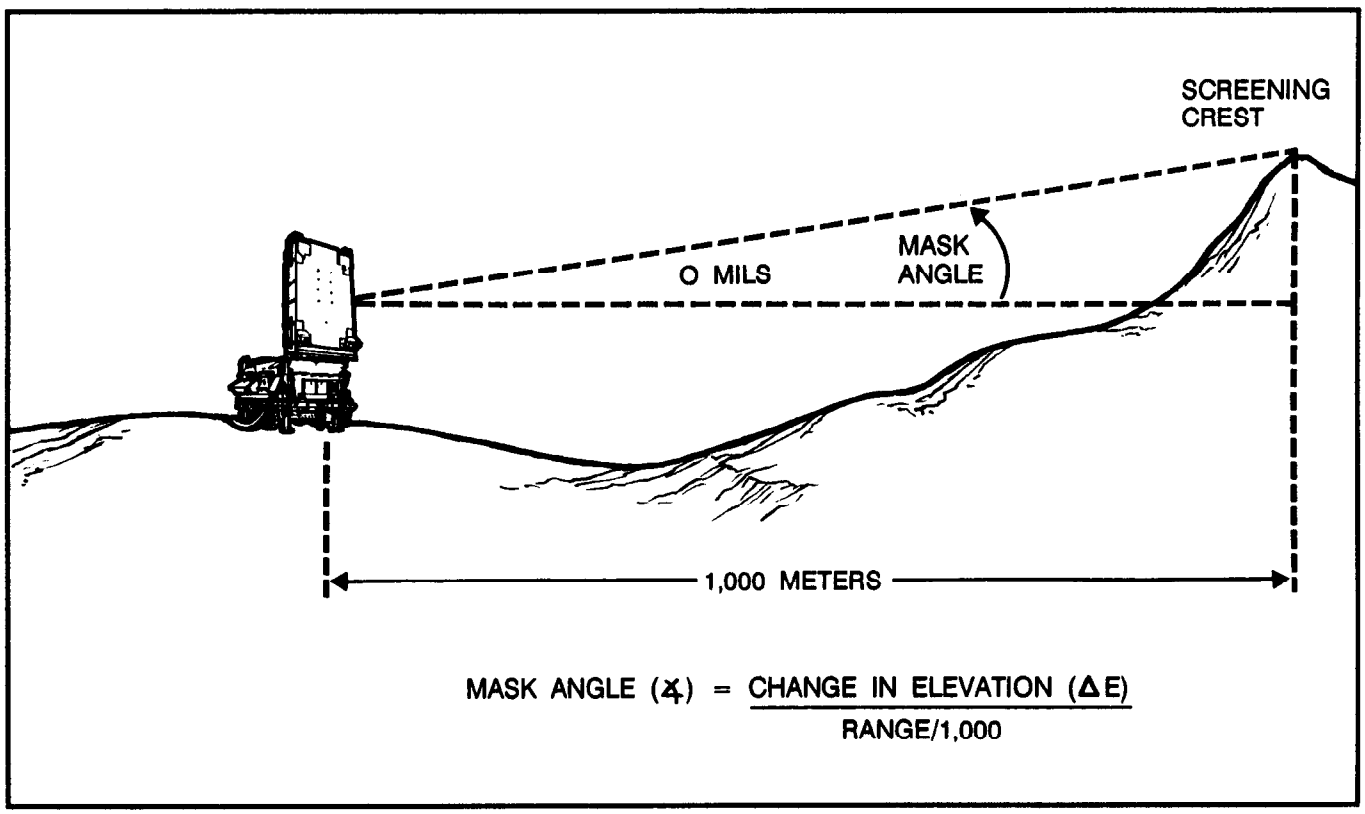

Firefinder Survivability Considerations

The electromagnetic signature of a radar is its greatest vulnerability. The enemy, through signal analysis, can use radio direction-finding (RDF) equipment to identify the radar employed. Knowledge of US doctrine would give the enemy an indication of the artillery organization to which the radar reports. Ground-based direction-finding (DF) of the radar signal can accurately locate the radar if three or more RDF receivers in a base detect the signal. When the enemy combines his radar ECM capabilities, radars become a lucrative source of information for friendly forces order of battle. The electromagnetic signature associated with Firefinder radars is primarily directed energy along the beam. Additionally, side-lobe radiation creates an electromagnetic signature. The unique imagery signature associated with Firefinder and MTLR antennas makes them particularly vulnerable to being acquired visually. Every effort must be made to reduce the vulnerability of FA radars to direction-finding and analysis. The following countermeasures should be considered when Firefinder radars are employed.

Occupy Optimum Sites. The best countermeasure to enemy EW is to occupy optimum sites. An optimum Firefinder site is one in which the radar is emplaced on level terrain having a gentle downward slope for the first 200 meters in front of the radar and then a sharp rise to a screening crest. In an optimum site, tunneling is effective in reducing side-lobe radiation. However, the number of optimum sites for positioning may be limited.

Screening crest. Use of a screening crest is absolutely critical to radar survivability in an environment where the enemy has ECM capability. It should be of primary concern in selecting positions to occupy.

Double screening crests. The use of two screening crests makes the radar more difficult for the enemy to locate. Radiation that is diffracted by the first crest and diffracted again by the second crest cannot be accurately located by direction-finding.

Tunneling. Tunnelings the technique of reducing the side, top, and back lobes of radiation by careful site selection. Positioning the radar so that vegetation is to the sides and the rear is an example of tunneling. Tunneling also may be accomplished by the use of digging-in or by sandbagging the position. Use of tunneling will reduce radar vulnerability to direction-finding of side-lobe radiation.

Background. Background is the area against which a target is detected. Normally, background considerations are associated with moving-target-locating radars. Backgrounds can be open, hard, or soft. An open background just above a screening crest is optimum for a weapons-locating radar.

Reduce Radiating Time. The shorter time the radar transmits, the less apt it is to be acquired. The maximum continuous transmission time for Firefinder radars should never exceed 2 minutes in an EW threat environment. Transmission time should be kept to the absolute minimum when feasible. The Firefinder survivability flowchart (in Chapter 3) should be used in conjunction with the EW threat associated with the IPB as determined at the S2 or G2 level. The flowchart can help to determine a practical way of employing Firefinder on the basis of the tactical situation. The chart allows flexibility in determining how long to radiate (cumulatively) from any position. It can also be used to determine how long a particular position can be occupied on the basis of the tactical situation and mission.

Narrow the Sector of Search. Another countermeasure to reduce Firefinder vulnerability is to narrow the radar sector of search. Although the radar can search a sector

1,600 mils wide, in an EW threat environment the beam should be narrowed to the minimum needed to accomplish the mission.

NOTE: The Firefinder survivability matrix shown below is based on the survivability flowchart in Chapter 3. The matrix is designed as a quick reference for the controlling headquarters and can be used in conjunction with the flowchart.

FIREFINDER SURVIVABILITY MATRIX

RADAR	SCREENING CREST	TUNNELING	EW THREAT (AIRBORNE THREAT NOT COVERED)	RADAR POSITION HAS SCREENING CREST AND TUNNELING	RADAR POSITION HAS SCREENING CREST ONLY	RADAR POSITION HAS NEITHER SCREENING CREST NOR TUNNELING
WEAPONS-LOCATING RADAR AN/TPQ-36	• WITHIN 1,000 METERS OF RADAR POSITION • IN FRIENDLY TERRITORY • FROM 15 TO 30 MILS ENEMY CANNOT ACHIEVE ELECTRONIC LINE OF SIGHT WITH HIS DIRECTION-FINDING SYSTEMS	USE OF FOLIAGE, BERM, OR BUILDINGS TO REDUCE SIDE-LOBE RADIATION	GROUND EW THREAT REVIEW WITH S2 CURRENT EW THREAT TO FIREFINDER	ACCUMULATE 15 OR MORE MINUTES OF RADIATION —but—	ACCUMULATE 8 OR MORE MINUTES OF RADIATION —but—	RADIATE 8 MINUTES MINUS MARCH-ORDER TIME OR 2 MINUTES, WHICHEVER IS GREATER; MAKE SURVIVABILITY MOVE —but—
				DO NOT EXCEED 2 MINUTES OF CONTINUOUS RADIATION		
			NONE	• NO EW TIME LIMIT • RADIATE AS MISSION REQUIRES • MONITOR EW SITUATION		
WEAPONS-LOCATING RADAR AN/TPQ-37	• WITHIN 1,000 METERS OF RADAR POSITION • IN FRIENDLY TERRITORY • FROM 5 TO 15 MILS ENEMY CANNOT ACHIEVE ELECTRONIC LINE OF SIGHT WITH HIS DIRECTION-FINDING SYSTEMS		GROUND EW THREAT REVIEW WITH S2 CURRENT EW THREAT TO FIREFINDER	ACCUMULATE 15 OR MORE MINUTES OF RADIATION —but—	ACCUMULATE 8 OR MORE MINUTES OF RADIATION —but—	RADIATE 8 MINUTES MINUS MARCH-ORDER TIME OR 2 MINUTES, WHICHEVER IS GREATER; MAKE SURVIVABILITY MOVE —but—
				DO NOT EXCEED 2 MINUTES OF CONTINUOUS RADIATION		

MTLR Survivability Considerations

Like the Firefinder radars, MTLRs produce a distinctive electromagnetic signature that makes them particularly vulnerable to enemy ECM. Additionally, the fact that MTLRs require electronic line of sight to the target and are emplaced from 1 to 2 kilometers from the FLOT makes them extremely vulnerable to visual detection. The following countermeasures should be considered in MTLR employment.

Occupy Optimum Sites. A site that facilitates good cover and concealment is critical for an MTLR to survive. Normally, the system should be elevated and employed during periods of reduced visibility. Tunneling and narrowing sector of search, as discussed for the Firefinder radars, also apply to MTLRs.

Reduce Radiating Time. In an ECM threat environment the MTLR should not exceed 2 minutes of continuous operation.

Narrow the Sector of Search. The MTLR should search an area no larger than the mission demands. If the AN/TPS-25A can do the same mission with a 360-mil sector as it can with a 540-mil sector, use the lesser sector.

Orient on Soft Background. If there are no terrain features or vegetation to reflect or absorb the radar beam beyond the target area, the background is open. Unrestricted access to unreflected radar beams is an ideal situation for enemy DF operators. Hard backgrounds such as rock, buildings, bunkers, or structures reflect radar beams. During reflection, the beam is bent and some phase-shifting occurs. A phenomenon known as multipath effect (the receiving of the same signal from different directions and out of phase with each other) makes it difficult to obtain good direction-finding bearings to the radar. However, this does not keep the intercept operator from performing signal analysis. Hard backgrounds are better than open backgrounds but are not as good as soft backgrounds such as foliage, tree lines, or brush. If a radar set is oriented toward soft ground and is sited to take advantage of tunneling, its vulnerability to intercept and direction-finding will be reduced considerably.

OFFENSIVE OPERATIONS

The primary role of target acquisition radars in the offense is to protect the friendly force by locating targets for engagement. In offensive operations, particular attention must be given to planning target acquisition to facilitate future operations. The TA planners need to ensure a smooth transition from one phase of the operation to the next by providing for continuous coverage of the zone of operation. The FSCOORD must specifically concern himself with coordinating the use of the terrain for the radar and recommending Firefinder zones.

Because in the offense our intelligence of enemy locations is developed to a degree that many enemy positions are known in advance and our force is uncovered as it maneuvers, the first Firefinder zone to be considered for use is the call-for-fire zone. Establishing a CFFZ will facilitate immediate counterfire to suppress enemy artillery disrupting our scheme of maneuver. Critical friendly zones may be phased along the maneuver axis of advance and activated when entered by friendly forces. This is particularly important in those areas where friendly forces are most vulnerable (for example, river-crossing sites and areas open to easy visual observation).

Assets may have to be decentralized to facilitate command, control, and movement. Cueing should be more decentralized during offensive operations. The FA controlling headquarters, in close coordination with the FSE, should designate cueing agents that can cue the radar by calling it directly. The controlling headquarters must inform the radar section who these agents are and which ones have priority. This is necessary to streamline our

acquisition and counterfire effort when committed maneuver forces may be particularly vulnerable to enemy indirect fire.

The main emphasis of MTLRs in the offense is on discerning enemy attempts at lateral repositioning or reinforcement.

One additional consideration in the offense is that TA assets may move forward so far or so fast that survey may initially be unavailable in some positions. Therefore, the TA assets may have to use hasty survey techniques for control until survey is available.

DEFENSIVE OPERATIONS

The primary role of TA radars in the defense is to protect those units and installations the commander deems critical to a successful defense. TA planners must also consider how to execute a transition from defensive to offensive operations such as counterattacks. Positioning, task organization, and on-order missions should facilitate the transition.

Firefinder in the Defense

In the defense, the first consideration in the use of the nine zones of a radar is to protect critical units or installations by using CFZs. The maneuver commander should indicate which these zones are. Once the commander has done so, the FSE must give these to the radar controlling artillery headquarters, which passes the zones to the radar.

The second consideration for the use of zones is areas in which to use CFFZs. On the basis of a thorough IPB and other target indicators, CFFZs should be used to monitor those suspect areas from which we anticipate artillery fire that could jeopardize our mission. This facilitates effective counterfire to suppress or neutralize those targets. ATIZs may be used in those areas where we are not sure about enemy artillery. They can also be used in areas that the maneuver commander may wish to monitor closely but are out of range of friendly organic artillery. A use of a censor zone is to place one around friendly artillery that may be firing in such a way that it could be acquired by Firefinder radars as hostile fire. For example, this could easily occur in the case of a nonlinear FLOT.

The MTLR in the Defense

The primary use of the MTLR in defensive operations is to provide combat information on the enemy. This is done by orienting the sector of search on target areas of interest (TAIs), named areas of interest (NAIs), or enemy avenues of approach. The MTLR normally remains in general support under div arty control, but it may be attached to a DS battalion to support a maneuver brigade operation. The MTLR is particularly effective in the counterreconnaissance effort. Because the radar operator can distinguish wheeled vehicles from tracked vehicles and heavy tracks from light tracks, the MTLR section can be of great value in identifying the actual location of the enemy reconnaissance (recon) forces, The MTLR should be positioned so that it can see the enemy coming directly at it. It also requires line of sight to the target and must be positioned on prominent terrain.

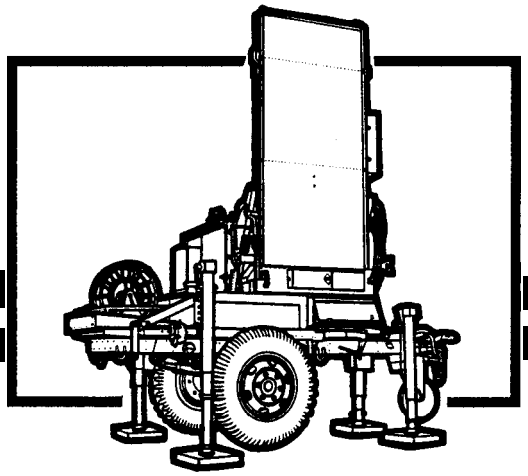

CHAPTER 5
TARGET ACQUISITION IN LIGHT DIVISIONS

Field artillery TA systems in a light division consist of three AN/TPQ-36 weapons-locating radars. Each direct support FA battalion has one WLR and a survey section consisting of two PADS teams. Although the TA assets organic to the light division are fewer than those of a heavy division, their mission still is to detect, identify, and locate targets accurately enough for attack by friendly assets.

Because of the austere structure of light divisions and the probable use of parts of them as a contingency force, increased emphasis is placed on the interaction of the key players in the targeting process and the effective employment of the division TA assets.

BATTALION TASK FORCE

A light battalion task force may initially deploy with supporting fire support and no organic field artillery TA assets. Early deployment of fire support assets, an AN/TPQ-36 WLR, met support, and a PADS team must be considered in the staff planning process, especially for allocation of appropriate transportation space.

When field artillery TA assets are not available, target data are generated from crater analysis, shelling reports, and combat reports from organic and attached combat, combat support, and IEW assets. These assets include COLTS, scouts, ground surveillance radars (GSRs); and so forth. Target data are passed from the task force S2 to the FSO or from the FIST directly through the FSO to a supporting FA firing unit using FIST channels.

If field artillery TA assets are deployed with the battalion task force, the task force FSO is responsible for their employment. The task force FSO, assisted by the task force S2, prepares the target acquisition tab and radar deployment orders to the FA support plan of the TF operation order. The task force FSO and S2 jointly develop sectors of search, Firefinder zones, zone management, and cueing guidance, and designate cueing agents. Target data from TA assets are passed directly from an AN/TPQ-36 WLR to the task force FSO or to the firing battery. Information from IEW assets and combat reports is passed from the task force S2 to the task force FSO.

FA TARGET ACQUISITION NOT AVAILABLE (BATTALION TASK FORCE)

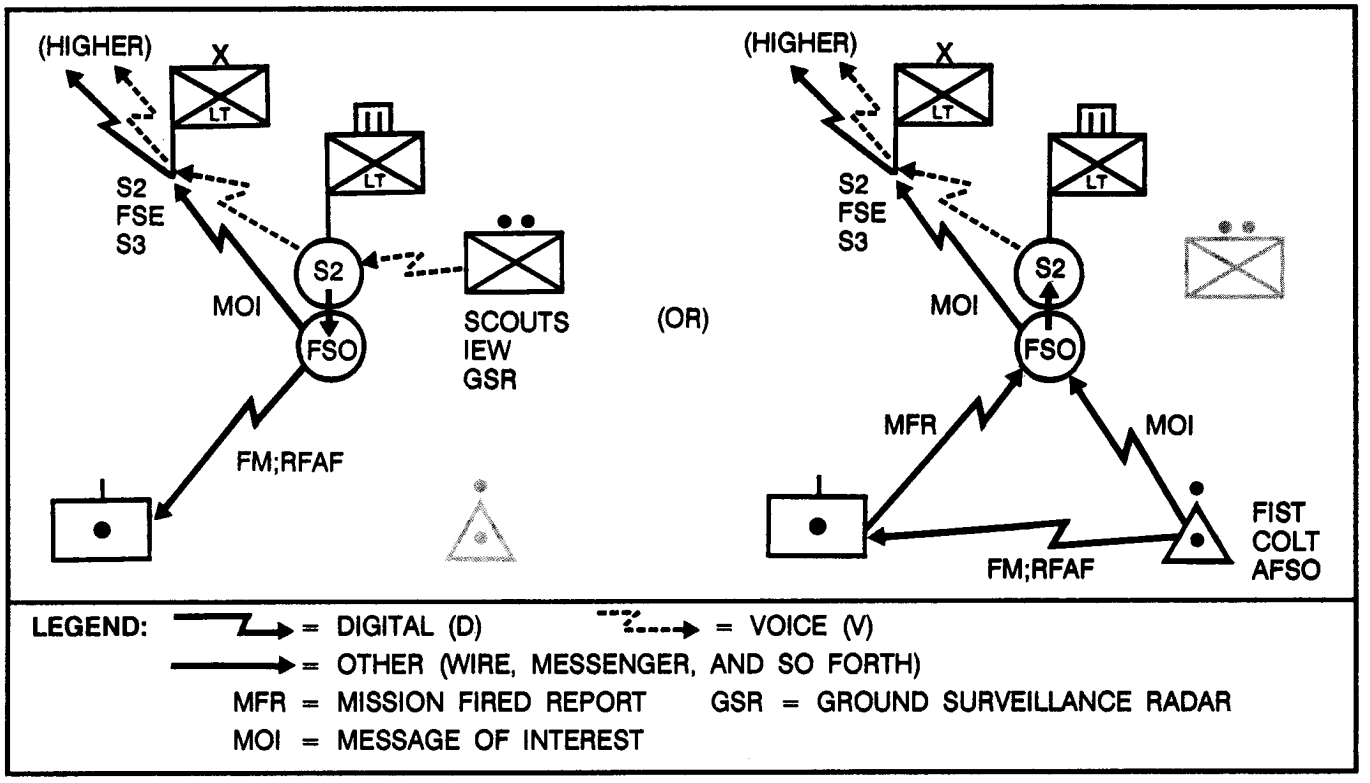

FA TARGET ACQUISITION AVAILABLE (BATTALION TASK FORCE)

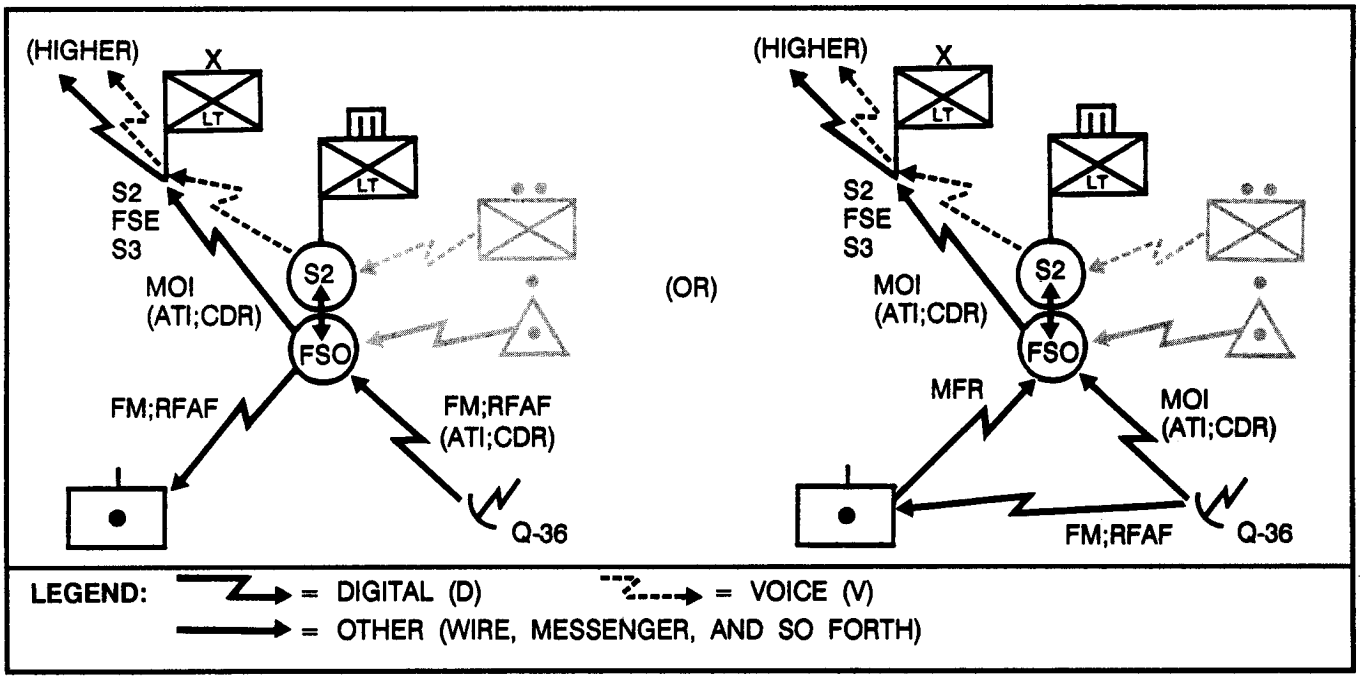

FA TARGET ACQUISITION NOT AVAILABLE (BRIGADE TASK FORCE)

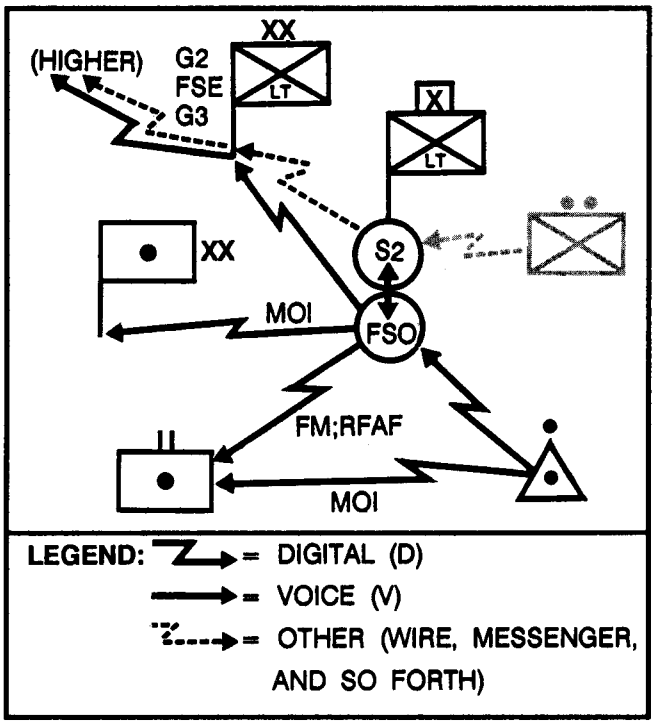

BRIGADE TASK FORCE

A light brigade task force normally deploys with a direct support FA battalion. Target acquisition assets organic to the direct support FA battalion consist of one AN/TPQ-36 WLR and a survey section of two PADS teams. However, since deployment of the direct support FA battalion is based on the factors of METT-T, the battalion may deploy with additional TA assets or with none at all.

If the FA battalion deploys without field artillery TA assets, target data are generated from crater analysis, shelling reports, and combat reports from the brigade organic and attached combat, combat support, and IEW assets. Target data are passed through fire support channels to the FA battalion TOC or through S2 channels to the FA battalion S2, task force S2, and G2. At the brigade and division levels, information is passed from intelligence channels to the brigade FSO or division FSE.

FA TARGET ACQUISITION AVAILABLE (BRIGADE TASK FORCE)

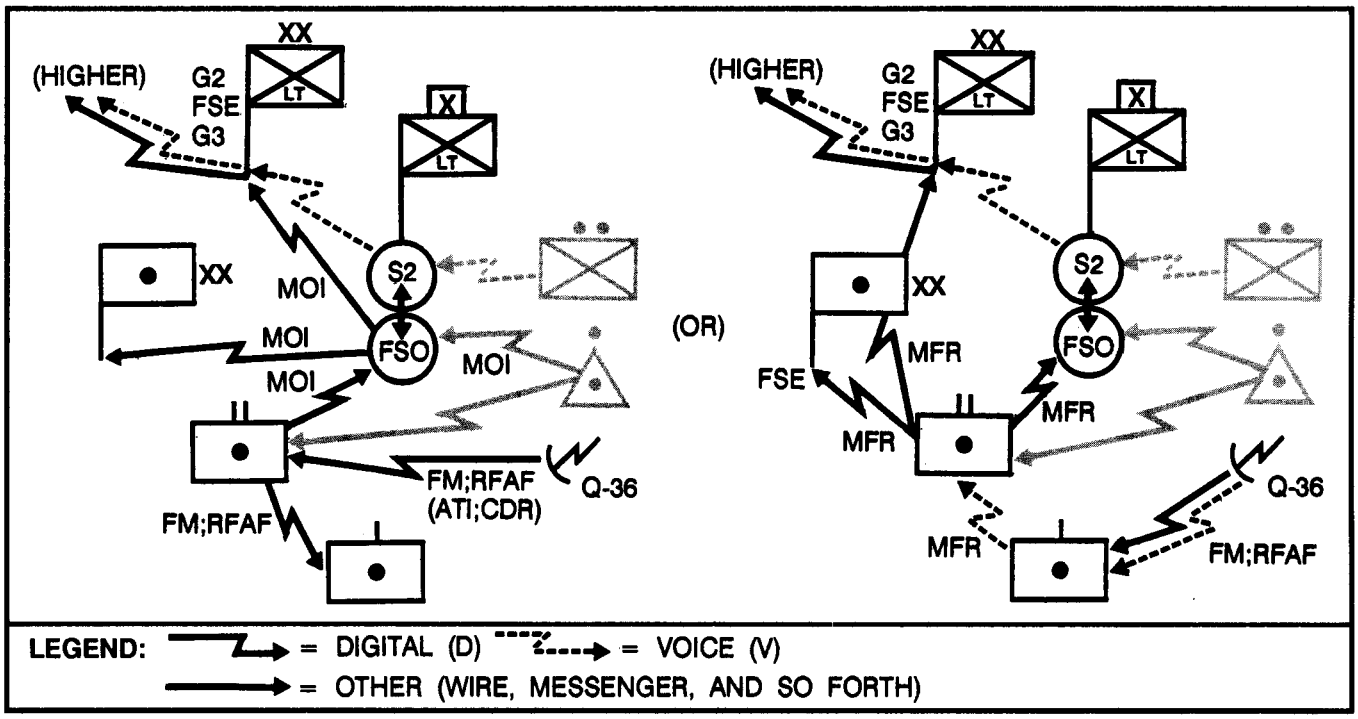

When the FA battalion deploys with field artillery TA assets, the FA battalion S2 is responsible for the employment of field artillery TA assets. He prepares radar deployment orders. The FA battalion S3 plans officer prepares the FA support plan of the task force OPORD, to include the TA tab prepared by the S2. The FA battalion S2 and S3 and the task force FSO jointly develop the sectors of search, Firefinder zones, zone management, and cueing guidance and designate cueing agents. The FA battalion S2 is responsible for ensuring that TA assets are incorporated into the reconnaissance and surveillance plan of the supported task force. Target data from field artillery TA assets are passed to the FA battalion TOC. If a specific firing element is designated as the primary responding element for counterfire, a quick fire net from TA assets may be established directly to the firing element. Target data from IEW assets and combat reports are passed through FIST or intelligence channels to the task force FSO.

DIVISION DEPLOYMENT

The div arty TOC will normally deploy if more than one brigade deploys. Without augmentation, the light division field artillery TA assets are limited to three AN/TPQ-36 radars. Field artillery TA augmentation must be considered during the staff planning process.

The div arty S2 has staff responsibility for employment of the division TA assets. The S2 develops, maintains, and coordinates the div arty TA plan. The TA plan is incorporated into the target acquisition tab to the FA support plan of the division OPORD. The counterfire officer prepares and issues RDOs, as required. The div arty S2 and the division FSE jointly develop the sector of search, Firefinder zones, zone management, and cueing guidance and designate cueing agents. It is critical that TA planning is coordinated with the FSE to ensure that it supports the division mission and the commander's intent. TA planning also must be

CENTRALIZED OR DECENTRALIZED CONTROL

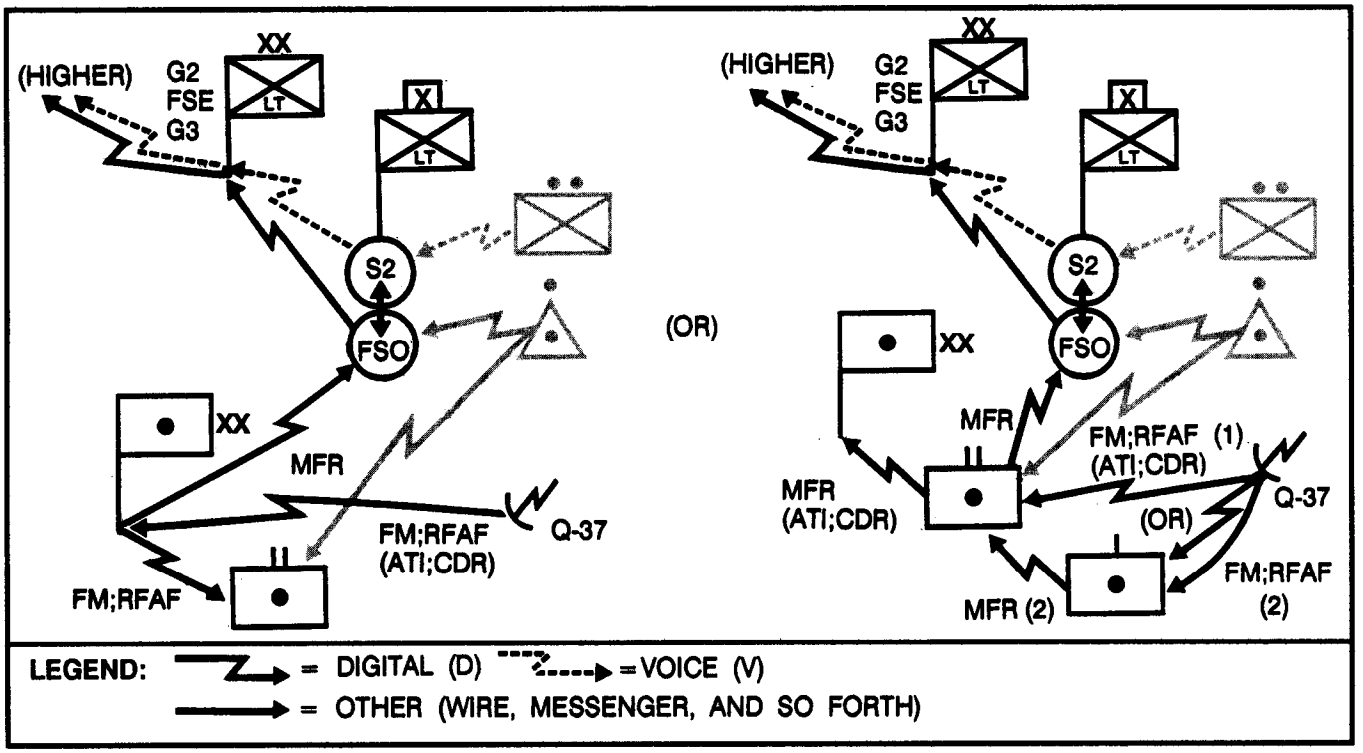

coordinated with the G2 for incorporation into the division collection plan. The div arty S2 prepares the target acquisition tab to the FA support plan of the division OPORD.

The div arty S2 recommends an organization for combat of TA assets to best meet requirements of the division and corps commanders. Centralized control enhances responsiveness, increases survivability, and guarantees optimal coverage to support the division commander's intent. It is recommended when the IPB indicates a high counterfire threat. In vague situations or lower counterfire threat environments, TA assets may be more decentralized.

When control is decentralized, target data from TA assets are passed to the controlling direct support FA battalion TOCs, unless directed otherwise. For example, a firing element designated to respond to counterfire missions or an FA battalion having an additional WLR attached for a specific mission may have a quick fire net linking it directly to a TA asset. Combat reports and target data from IEW assets are passed through fire support or intelligence channels to the FSO. The FSO passes information digitally to the DS FA battalion S2.

CORPS AUGMENTATION

Corps Target Acquisition Detachment

The corps target acquisition detachment provides the light division commander critical TA and processing capabilities not organic to the light division.

The CTAD is assigned to the corps artillery headquarters on the basis of one per light division assigned to the corps. The CTAD is designed to be attached to each light infantry, airborne, and air assault division on deployment. The CTAD consists of a headquarters section a PADS team, two AN/TPQ-37 sections, and an AN/TPS-25A moving-target-locating radar. (See Chapter 2.)

- The detachment headquarters consists of a processing section and maintenance, supply, administrative, and communications personnel. The detachment commander, a 13D lLT, advises the div arty commander on TA matters and serves as a div arty counterfire officer.
- The PADS team provides survey support to detachment TA assets. Along with div arty survey, the PADS team help survey other TA and IEW assets, as directed.
- Each WLR section consists of one AN/TPQ-37, which provides a first-round fire-for-effect capability for the counterfire mission.
- The MTLR section consists of one AN/TPS-25A, which provides combat information on moving ground targets.

When the CTAD is attached to the division, detachment support personnel augment the div arty HHB. Once augmented, the div arty HHB is responsible for providing logistical and administrative support to the detachment.

The div arty targeting element is formed when the CTAD processing section becomes the target production section and combines with the div arty order-of-battle section. The personnel composing the div arty targeting element are listed on the next page. Selected personnel from the targeting element as determined by METT-T may deploy as a counterfire team when the div arty as a whole does not deploy. Primary responsibilities for the targeting element or a counterfire team are as follows:

- Recommending TA coverage to the div arty commander. This includes command and control relationships of organic and attached TA assets.
- Providing input to the div arty S2 for him to consolidate into the target acquisition tab, which is then given to the S3 for attachment to the FA support plan.

DIV ARTY TARGETING ELEMENT[1]

POSITION	RANK	MOS
Div arty S2	MAJ	35D00
Counterfire officer	CPT	13D00
Detachment commander and/or counterfire officer	1LT	13D00
Div arty intelligence sergeant	MSG	13Z50
Senior radar sergeant	SFC	13R40
Detachment sergeant	SFC	13F40
Intelligence sergeant	SSG	96B30
Target processing section chief	SSG	13F30
Intelligence analyst	SGT	96B20
Intelligence analyst	SPC	96B10
Target processing specialist	SPC	13F10
Target processing specialist	PFC	13F10

[1]Exact composition may change in accordance with the unit modification tables of organization and equipment (MTOE).

- Positioning general support TA assets to ensure that they are incorporated into the TA plan, coordinating sectors of search, and providing radar zone information.
- Preparing RDOs as required.
- Monitoring TA asset operations, status, and current and proposed locations.
- Processing combat information and intelligence received, producing targets, preparing target cards, and passing them to the div arty fire control element.
- Maintaining the artillery OB data base and target files.
- Requesting target damage assessment.
- Serving as the NCS for the div arty TA/intel net.
- Providing cueing guidance to all division TA assets and ensuring its inclusion in the TA tab or the OPORD, depending on the cueing agents designated and RDOs.
- Supporting the division FSE targeting effort.

When detachment TA assets are attached to the division, they are controlled by the div arty commander through the targeting element. On decision by the corps to augment the division with the CTAD, the early deployment of CTAD assets and personnel will be incorporated into the div arty staff planning process.

The CTAD processing section includes a senior radar sergeant (SFC, 13R40), who performs the same functions as the radar platoon sergeant in the heavy division. When the CTAD is deployed, the senior radar sergeant provides guidance and help in the decision-making process for radar employment, survivability, priorities, zones, capabilities, and cueing. Allocation of CTAD assets and personnel will be based on the factors of METT-T. For example, target processing personnel and/or an AN/TPQ-37 WLR may be attached to a brigade task force.

Field Artillery Brigade

An FA brigade may be attached to, or assigned the mission of reinforcing, a light division. When this occurs, the FA brigade could be tasked to perform the counterfire role. The FA brigade will require field artillery TA asset augmentation to perform this role.

If the CTAD in its entirety is attached to an FA brigade, the brigade counterfire officer and the CTAD commander will control positioning and cueing guidance and will resolve overlapping coverage. However, the div arty S2 still retains staff responsibility for the employment of all field artillery TA assets within the division. Target information will be used to support the maneuver commander's mission. The FA brigade is responsible for providing security, logistics, and administrative support to the detachment. For additional information on command and control relationships, see Chapter 4.

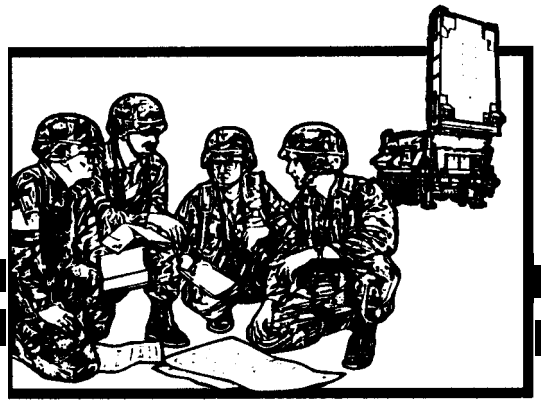

CHAPTER 6

FIELD ARTILLERY BRIGADE TARGET ACQUISITION

One option a division commander may have for using a reinforcing or attached FA brigade headquarters provided by the corps is to conduct counterfire operations for the division. Using an FA brigade headquarters as the division counterfire headquarters does not relieve the div arty commander of his responsibility for orchestrating counterfire. The div arty commander is still responsible to the division commander for all matters relating to fire support. Using an FA brigade headquarters to execute the division countefire role gives the div arty commander and his staff more flexibility in performing the overall fire support mission. This chapter shows an example of how the counterfire battle can be accomplished by using an FA brigade as the controlling headquarters.

COUNTERFIRE ROLE

As the division FSCOORD, the div arty commander may choose to divide artillery tasks with an available reinforcing or attached FA brigade headquarters to improve planning and execution. One way to divide the tasks is to have the div arty, still the force artillery headquarters, retain overall responsibility for fire support for the division and specific responsibility for close support and interdiction (attack at depth) roles. The FA brigade takes responsibility for accomplishing the counterfire tasks. This division of responsibilities allows each headquarters to concentrate on specific tasks and improve overall ability to plan and control execution.

COMMAND AND CONTROL

When tasked to perform the counterfire mission, the FA brigade must be augmented with TA assets and additional targeting personnel. Normally, the FA brigade has operational control (OPCON) of the TAB or CTAD. By making the TAB or CTAD OPCON to the FA brigade, the div arty commander centralizes target acquisition command and control under one headquarters and provides to the FA brigade the major source of FA targeting information. The processing section from the TAB or CTAD provides the essential additional personnel to form a target production section in the FA brigade TOC. Thus augmented, the FA

brigade can determine where the radars should be positioned and when they should move in support of the operation. In coordination with the division FSE, the brigade can implement the commander's decisions as to what Firefinder zones best support the operation, who should be designated as cueing agents, and under what circumstances they should cue. In this way, the FA brigade optimizes radar coverage, reduces target duplication, and provides better counterfire support to the division.

The way the FA brigade receives information from the radars differs depending on the tactical situation and METT-T. The FA brigade commander in coordination with the div arty commander recommends an organization for combat of TA assets to best meet the division commander's intent. He considers the tactical situation, the overall artillery organization for combat, and radar capabilities (especially planning ranges). He also must continually reassess his organization for combat as the situation changes to ensure the most efficient and responsive counterfire is being provided.

LIAISON

Liaison officers (LOs) are sent from the FA brigade and reinforcing FA battalion headquarters to facilitate the transfer of information to support counterfire operations. Normally, LOs will be sent from the FA brigade headquarters to the supported FA headquarters as part of inherent responsibilities. At the supported field artillery TOC, the LO has access to the most current battle information. His position facilitates the exchange of targeting inforrnation, and he can provide his FA brigade or battalion with updates to friendly and enemy situations and changes to the FLOT and CFL.

However, the reinforcing FA battalion LOS may be sent instead to a maneuver brigade TOC. There the LO is better positioned to have TA input to brigade plans in a fast-changing situation; to clear radar positions, routes, and times of march; to clear fires short of the CFL; and to recommend changes in radar coverage (that is, sectors of search and zone management). At the maneuver brigade TOC, the LO can help to ensure that radars respond early and quickly to the fast-moving tactical situation. As the counterfire representative at the maneuver brigade TOC, the LO must have a working knowledge of how FA target acquisition can support the maneuver unit. In particular, this includes radar capabilities and Firefinder employment techniques. Like the LO at the supported field artillery TOC, the LO at the maneuver brigade TOC monitors the developing situation and makes recommendations as required on the designation of cueing agents, cueing and cueing agent priorities, and cueing guidance. However, the LO at the maneuver brigade TOC may be designated as a cueing agent himself.

In a like manner, the FA brigade headquarters may instead send its LO (equipped with a variable-format message entry device [VFMED]) to the division main CP. The FA brigade LO works with the field artillery intelligence officer (FAIO) to provide a timely exchange of targeting information. This should result in more responsive counterfire in support of the maneuver commander.

COMMUNICATIONS

A major challenge when the FA brigade does counterfire is the integration of command, control, and communications (C3). Counterfire must fit in the overall concept of the force artillery and yet be flexible enough to change priority of fire support tasks during battle.

NOTE: The rest of this chapter is an example of how an FA brigade may establish command, control, and communications for TA assets in an offensive situation.

EXAMPLE

The FA brigade in this situation is attached to the div arty. Each of the cannon battalions of the brigade has been assigned the mission of general support reinforcing a DS battalion, and the brigade MLRS battalion is GS to the division. On the basis of the situation and the commander's intent, the FA brigade commander has determined that one Q-36 radar should be linked into each GS reinforcing cannon battalion TACFIRE for communications and fire mission processing. The Q-37 radars will link directly into the FA brigade TACFIRE. The FA brigade commander has sent his LOs to the division main CP and has directed that the GS reinforcing battalion LOs be sent to the TOCs of their supported maneuver brigades.

The targeting agencies depicted in the figure provide information to plan and execute the close support and deep fires roles. Most of the assets on the right are observers who provide real-time or near-real-time information. The assets on the left provide information to plan and execute counterfire. The WLRs are assumed to be linked to their cueing agents.

EXAMPLE CONTROL RELATIONSHIPS OF TARGET ACQUISITION ASSETS

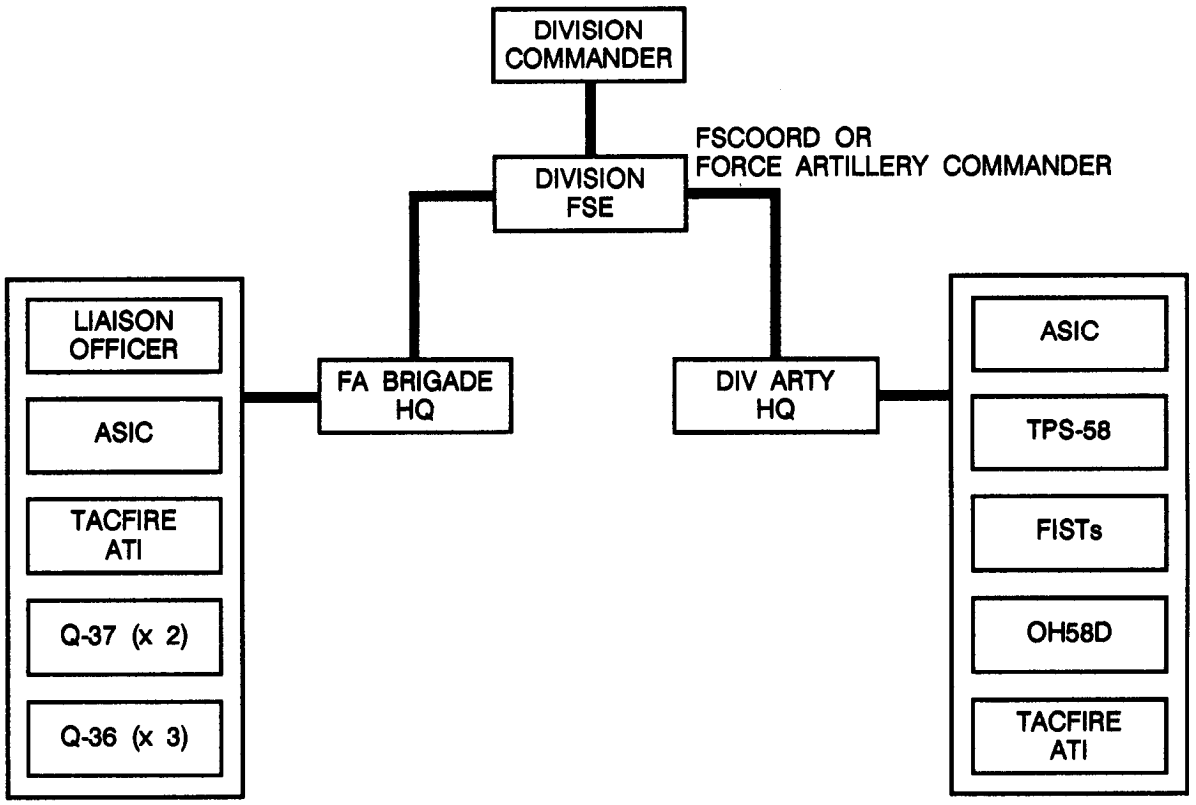

LEGEND: ASIC = all-source intelligence center ATI = artillery target intelligence

EXAMPLE (Continued)

Fire missions that result from either a fire mission request (FM;RFAF) or a coordinate report (ATI;CDR) are transmitted differently. The difference is based on which radar has acquired the target.

The Q-37 radar is in direct communication with the FA brigade TOC. The radar transmits the target information digitally to the FA brigade TACFIRE. The TACFIRE automatically transmits the fire mission to the selected firing unit. If the radar transmits a coordinate report, the TACFIRE computer reviews the target and determines if it meets the preestablished attack criteria entered in the TACFIRE. If the target meets the criteria, the TACFIRE automatically generates a fire mission and passes it to a battalion. If the target does not meet the criteria, it is stored in the TACFIRE artillery target intelligence (ATI) files for future use.

EXAMPLE FORCE ARTILLERY COMMUNICATIONS AND INFORMATION FLOW

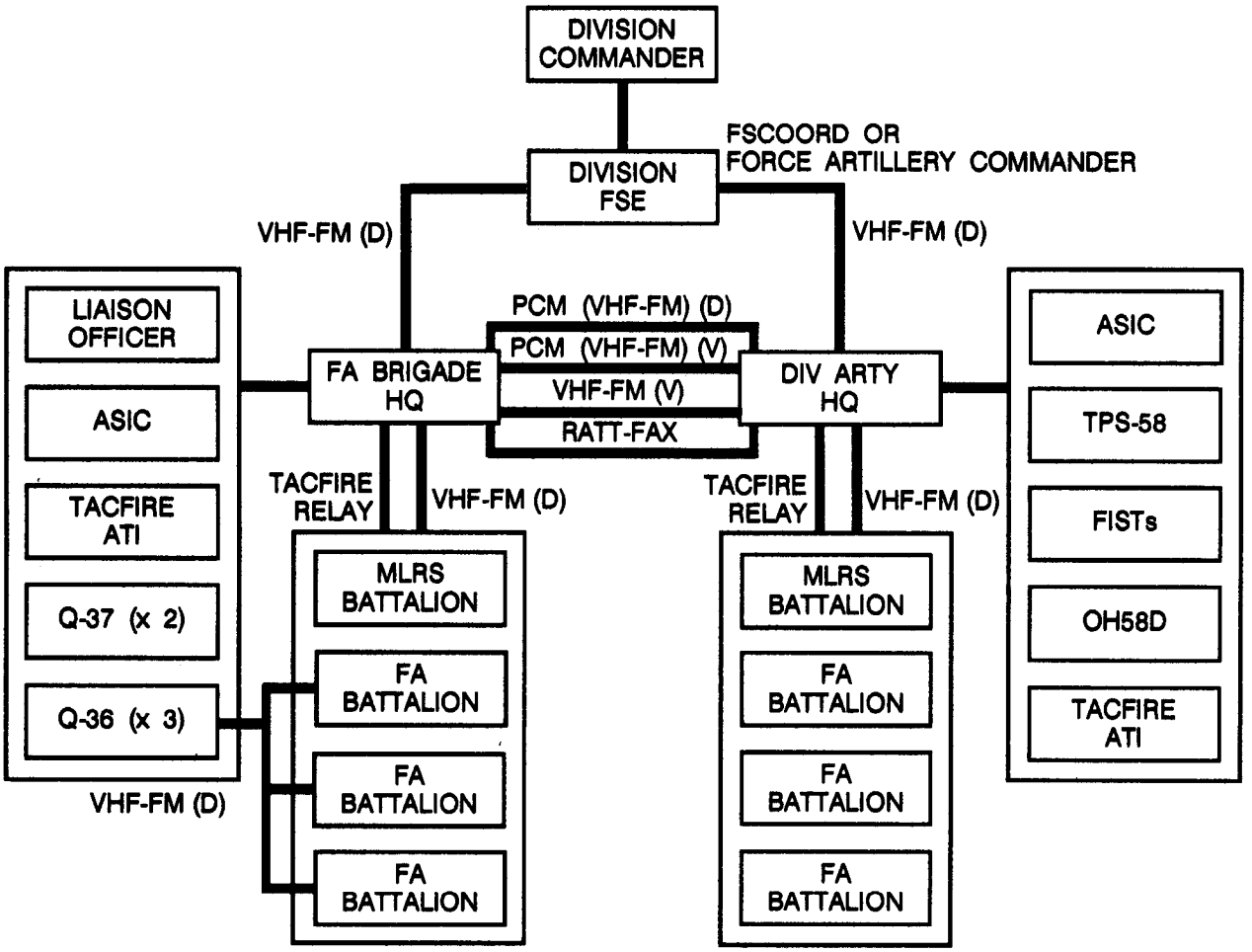

LEGEND:

PCM = pulse code modulation
FAX = facsimale
RATT = radio teletypewriter
ASIC = all-source intelligence center
ATI = artillery target intelligence
V = voice
D = digital

EXAMPLE (Continued)

The Q-36 radar communicates directly with a counterfire battalion. When the radar acquires a target, either a fire mission or a coordinate report is transmitted digitally to the battalion TACFIRE computer. If a fire mission is transmitted, the battalion shoots the mission. If a coordinate report is transmitted or if the battalion is not able to fire the fire mission, the target is passed up to the FA brigade TACFIRE. The FA brigade TACFIRE then goes through its tactical fire mission processing and stores the target data or selects another battalion to fire the mission.

The net structure shown in the preceding figure offers several advantages and performs two major functions. First, the two headquarters continuously share information by using TACFIRE message of interest (MOI) processing. But more importantly, each headquarters accesses the battalions of the other by using the TACFIRE automatic relay capability. This last feature is especially important in the initial stages of war when we expect massive enemy artillery preparations to generate a target-rich environment. If the FA brigade receives a target from a Q-37 radar and its battalions are shooting other missions, the mission is passed through the div arty TOC to one of the div arty battalions. In other words, the entire force artillery is available to fire counterfire, if necessary.

In a like manner, if the div arty needs FA brigade support on a close support or deep fires target, it may pass this target through the FA brigade TOC to one of its battalions. This also enables the force artillery commander to mass fires and shift priorities between counterfire, close support, and attack at depth.

The nondigital or voice net structure used when the FA brigade executes the counterfire mission is no change from current doctrine except for a second FA brigade VHF-FM voice net. This net is needed for controlling counterfire and issuing instructions to the Q-37 radars and liaison officers. When a digital communications means is operational, it is used primarily to pass nonformatted instructions and to clear radar positions and counterfire. The second FA brigade net also provides a communications link between the LOs at the maneuver brigade headquarters and the target production section at the FA brigade TOC. When digital communication is interrupted, the second FA brigade net becomes the primary means of receiving and passing targeting information. Other nets available to pass information between the two headquarters include the brigade and div arty VHF-FM voice nets, radio teletypewriter (RATT), and voice and digital pulse code modulation (PCM).

This communications structure facilitates the dissemination of information and transfer of control from one headquarters to another. It also provides the force artillery redundant communications capabilities and improves its ability to maintain continuous operations and support for maneuver forces.

APPENDIX A

MANUAL PROCESSING OF TARGET DATA

The amount of processing needed to develop a target varies extensively. In its simplest form, targeting is the passing of a target from a known, accurate, and reliable source to the fire control element (FCE) or FDC for attack within established time frames. In its most complex form, it is the collation of target indicators from diverse sources into a target identification and location accurate enough to justify attack with fire support means.

In TACFIRE-equipped units, target data are transmitted and processed automatically according to the commander's guidance and target selection standards stored in the TACFIRE computer. The automation of target processing has greatly enhanced the responsiveness of the entire fire support system. When the advanced field artillery tactical data system (AFATDS) is fielded, it will give the field artillery an even greater capability to process target data and engage targets expeditiously.

Although TACFIRE, and eventually AFATDS, provides automated target data processing, div arty and FA brigade headquarters still must be able to process target data manually. If the automated system fails, we must still be able to process incoming information. Also, not all units have an automated capability. We must be ah/e to quickly and accurately process target data under all conditions. This appendix explains how target data are processed manually in either a div arty or an FA brigade headquarters.

RECORDING TARGET INFORMATION

Targeting information being reported to the TOC is recorded first on an artillery counterfire information form. (See Appendix B.) It is designed so that a user can report information by block letter to avoid confusion, It should be used as a work sheet to record information sent by voice. It should also be used as a prompt to ensure that a complete report is received.

Note: A reproducible copy of DA Form 2185-R (Artillery Counterfire information) is at the back of this book. Its use is explained in Appendix B.

As soon as possible, information recorded on the artillery counterfire information form (ACIF) should be transferred to a target card. The target card is used to store detailed information chronologically so that it can be referenced quickly in a manual targeting operation. Target cards are prepared by and

filed within the target production section of the targeting element in the div arty TOC. An original and two copies are prepared of each target card. Targets are disseminated by circulating the target cards through the TOC fire control element, operations element, and order-of-battle section and then back to the target production section for updating and filing. Target number and category are recorded in the heading of the target card. This allows the cards to be referenced by target number and target category. For detailed information on the use of the target card, see FM 6-20-2.

Information that comes into the TOC should be passed immediately to the target production section. The information is compared to target selection standards to determine if the reported data constitute a valid target or a suspect target. The information is then transcribed onto a target card, and actions described below are taken by the different sections within the TOC. Directional information that is not associated with a grid cannot be placed on a target card and should be placed on the ray overlay. The DA Forms 2185-R should be retained until the ray is associated with a target.

Target Card Flow for Targets

After a target card is completed for a target, the original should be sent to the FCE and one copy to the OB section. In the FCE, the information on the target card is compared to the attack guidance. If the guidance is met, a fire mission is processed. Fire support coordinating measures should be checked, and necessary coordination should be made before the fire mission is processed. The target is recorded on the master target list. Targets added to the master target list that were not originated by the FSE are sent to the FSE to be added to its target list. If the target is attacked, the FCE should record on the target card the unit that fired, date-time group of the engagment, andtype and/or number of rounds fired before sending the card to the operations element.

The original target card is then sent by the FCE to the operations element to keep that element informed of the situation and to aid in the coordination of support for the FA system. The target is then added to appropriate schedules as necessary. Ammunition status is updated if necessary, and any requests for additional fire support are evaluated and sent to the appropriate agency.

As the fire control and operations elements are processing and annotating the original copy of the target card, the OB section is recording and evaluating the information on the copy it received from the target production section. Information should be recorded on the OB map, in a detailed duty log, and in an OB workbook.

After all the information has been added by the other sections, the original and copy of the card are returned to and filed in the target production section. One copy is filed by target number; the other, by target type after the data from one have been transcribed to the other. If the target was engaged that information should be given to the OB section. Also, if TDA is available, it should be recorded on both copies of the target card and passed to the OB section.

Target Card Flow for Suspect Targets

Grid-producing information received by the target production section that does not meet target selection standards and produces a suspect target is also recorded on a target card. For suspect targets, the original target card is maintained by the target production section and the information is posted on the target overlay as a suspect target. One copy is sent to the OB section for posting on the OB map. The OB section will analyze this new information to see if a target can be confirmed through other sources. When the OB section has recorded all of the information from the target card, OB section personnel

will initial the section's copy of the target card and return it to the target production section. The target production section maintains suspect target cards in a separate file. Suspect target cards are continuously evaluated with new information to develop targets. Once a suspect target becomes a valid target, both copies of the target card are routed through the TOC as discussed above.

Duty Journal

If time permits, each element or section should keep a duty journal to record major events that occur during its shift. The duty officer will specify types of information to be recorded, all of which should ease shift transition. This information might include:

- Changes in target selection standards or attack guidance.
- Changes in the enemy posture, disposition or activity.
- Changes in the fire support capability.
- Changes in fire support coordinating measures.

RECORDING TARGET INFORMATION GRAPHICALLY

While a detailed record of information is desirable, peak activity periods may preclude such meticulous procedures. Traditionally, in manual operations, plotting information on maps has been a method of rapidly recording and displaying data. Each element will have at least one map. The targeting element will maintain two maps-one in the target production section and one in the OB section.

Targets

Target information is recorded on overlays by using target symbols and crater ray symbols. Target symbols should not be confused with gunnery tick marks. They are different in construction and with respect to the information recorded on them.

Target Symbol. A target symbol is a small cross with information pertaining to the target type and source. The upper right corner (Quadrant I) contains the target number; for example, AY2001. The lower right corner (Quadrant II) contains the source of the target and the target location error (TLE) of that source; for example, weapons-locating radar and a 0- to 50-meter target location error. The lower left corner (Quadrant III) contains the target description.

In the upper left quadrant of the symbol is recorded either the last time a transmission was picked up from that station, the last time fires were noted from the position, or the time the target was first located.

Not all agencies that plot targets need to put all the information in the target symbol. The FCE needs only the target number and type and sometimes target location errors when such errors force a modified attack response. The target production section should plot all the information to help in developing and purging targets. Unit SOP should establish required elements of targeting information to be plotted in each section or element to include FSEs. In any circumstances, the question that must be answered is, What must be recorded to allow us to perform our mission?

TARGET SYMBOL

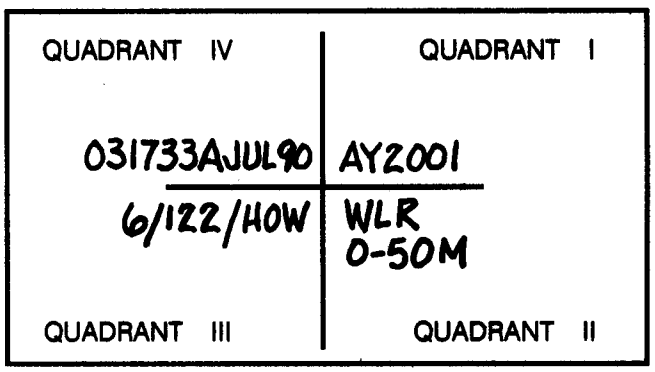

Suspect Targets. A suspect target symbol should be drawn with dashed lines. Everything known about the target should be included. Suspect targets should be plotted only by elements that are engaged in developing or predicting targets. They should never be plotted on maps used to control allocated fire support. In the case of the div arty TOC, only the targeting element would plot target indicators.

Target Indicators

Directional information that may indicate the location of a target is recorded by plotting rays on a ray overlay used on the target production map. Most rays will be plotted from crater analysis. (See Appendix B.) While not a high-technology source of information, crater analysis is still valuable. It is the only absolute way of confirming which weapon systems are firing into the zone short of actually seeing the weapon fire.

At div arty, the ray overlay should be posted on the target production section map. There should be provisions to transfer the overlay to the OB section map for brief periods to aid the OB section in target prediction.

Crater Rays. Crater rays are drawn on an overlay starting at the point where the rounds impacted. Rays are drawn in the direction reported in the SHELREP; that is, the direction from the impact point to the point from which the round was fired. On the overlay the impact point is represented by a dot, around which a small circle is drawn. The length of the ray drawn corresponds to the maximum range of the weapon that was associated with the shelling report. If the weapon is not known, the ray should be drawn to scale of the maximum range of the longest shooter in the zone.

The crater ray is labeled with all information available to aid target production and OB sections in developing targets. The description of the weapon or weapons that fired is placed on top of the ray. The description should conform to the format specified by SOP for describing Quadrant III of the target symbol (for example, number, caliber, and type of weapon). Care should be taken to ensure that the shelling report includes a rough count of rounds, the duration of the shelling, and the nature of the fire (volley or individual gun). Targeting personnel should prompt or query reporting agencies to provide such information, as it can be used to determine the number of weapons firing. In the case of a large number of rounds, careful examination of the craters should be made in an effort to determine the number of batteries that massed on the target.

The ray should be labeled below with the date-time group (DTG) associated with the shelling and the local file number of the SHELREP associated with the ray. If the DTG of the shelling is not available, the time the shelling was reported should be recorded. The local file number allows a target analyst to refer back to the SHELREP in the file to determine who sent the message and to view detailed information of the shelling not presented on the ray.

SAMPLE CRATER RAY

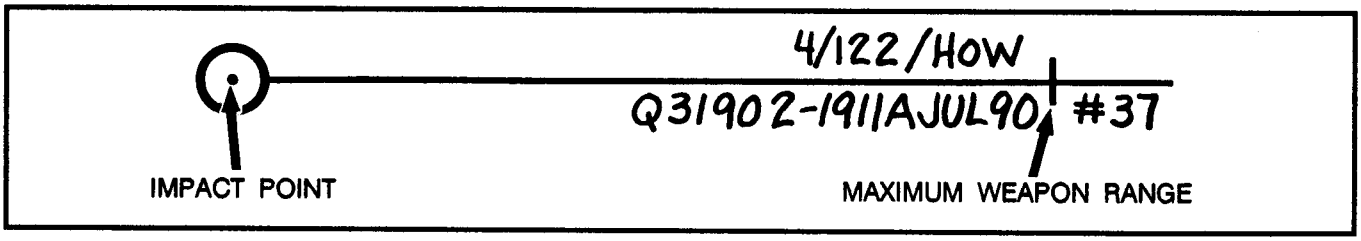

CRATER RAY COLOR-CODING SCHEME

WEAPON TYPE	CALIBER RANGE	RAY COLOR
Heavy cannon	153 to 203 mm	Red
Medium cannon	123 to 152 mm	Green
Light cannon	76 to 122 mm	Blue
Multiple rocket launcher	All calibers	Orange
Mortar	All calibers	Yellow
Unknown	- - - - - -	Black

Rays should be color-coded to avoid false correlation of data. The color-coding system above simply speeds up the process of correlating the rays. It should not preclude the target analyst from looking at the description of the rays before converting the intersections into a target.

Obviously, a chance for error exists if targeting personnel fail to look at the weapon description. However, the number of weapon system types in each Threat caliber range listed precludes assigning a specific color to each caliber and type.

When three crater rays associated with a specific caliber intersect and they are noted as occurring within a limited period of time, normally the result is a target. The rays may intersect at a single point, but more often they intersect to form a triangle from the intersection points. The target may be derived by placing a point in the center of the triangle formed by the intersecting rays. However, it is possible that the intersection triangle could be quite large. In that case, one of the rays is probably in error and the target analyst should wait until another ray or other information pertaining to the firing location is received. Once a target is developed or a ray is associated with a grid, the information should be transferred to a target card. The target card is processed as discussed earlier. The ray(s) may then be removed from the overlay, and the DA Forms 2185 should be placed in an inactive file.

Flash Rays. It is also possible to record an independent flash ray (that is, the graphical information from a reported observation of a flash associated with a measured azimuth). Flash rays are difficult to relate to a weapon system (except multiple rocket launchers) and usually cannot be ascribed to a specific caliber. Flash rays can be used in association with crater rays and suspect targets. All information available should be placed on the flash ray.

FLASH RAY

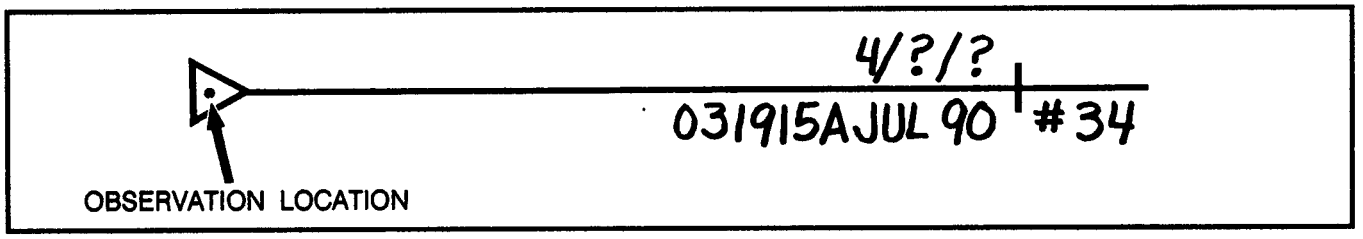

DIV ARTY TACTICAL OPERATIONS CENTER RESPONSIBILITIES

Each section in the div arty TOC keeps and processes different target information for different reasons. This paragraph details what information should be maintained in each section. The narrative is summarized by the flowchart at the end of the appendix.

Target Production Section

The target production section should maintain the target card file for the TOC. The section should keep an active file of current, valid, and suspect targets and an inactive file of targets that have been purged. The section should maintain the target production map and three overlays on which the following items should be attached or plotted:

- Major friendly unit boundaries. These may be drawn on Overlay 1, or they may be drawn on the map if it has an acetate covering.
- Target acquisition assets and their coverage. This information is included on Overlay 1.
- The ray overlay. This is Overlay 2 and contains all reported ray information.
- All targets in Categories 1, 2, and 4 and all suspect targets are on Overlay 3, the target overlay.

Order-of-Battle Section

The OB section plots information differently than the other elements of the TOC. Instead of plotting targets by using target symbols, the OB section uses standard military symbols. Standard military symbols allow a viewer to identify unit types very quickly. The primary mission of the OB section is to develop the enemy order of battle. Therefore, the section must be able to get the "big picture" very quickly. If the targets were plotted with target symbols, this would be much more difficult. The OB map should be posted with the following data

- The enemy situation, including suspect enemy units and boundaries.
- Friendly unit boundaries.
- A terrain and obstacle overlay, if prepared.

The OB section uses two other tools in predicting target locations and developing enemy order of battle. The first is the DA Form 1594 (Daily Staff Journal or Duty Officer's Log). The other is the order-of-battle workbook. These tools, in conjunction with the OB map, allow the OB section to make predictions and projections about the enemy force.

Daily Sfaff Journal. Good military sense dictates that each functional part of the TOC keep track of the important incidents that occur on each shift. This ensures some continuity of operations and makes changing shifts more efficient. The OB section must keep such a journal, but it must also maintain a complete record of events based on the time that the event occurred or was noted. Therefore, the OB section maintains two daily journals. The first is kept like any staff journal, chronologically as information is received. The other daily staff journal kept by the OB section is maintained chronologically by event. This provides the OB officer a means of evaluating the activity in the sector and the implications of that activity based on the times noted. Because of the number of changes likely to occur in the second journal, locally approved means such as magnetic boards or 3- by 5-inch cards may be used to facilitate inserting changes.

OB Workbook. The OB workbook is a collection of information that allows the OB section to file information by topic. The workbook is locally fabricated, and no set format is prescribed for the topics to be included. It will be maintained only for a particular operation or until a unit breaks contact, after which another workbook should be started. Examples of topics include FA weapons, nuclear-capable systems, movement

indicators, air activity, command and control facilities, and deception. These are examples only. Individual units develop topics that are relevant to their operations. Order-of-battle officers must analyze the mission and the commander's requirements and prepare a workbook to support that mission.

Fire Control Element

The fire control element should plot all targets on the fire control map. If too many targets are being developed, consideration should be given to plotting the high-payoff targets first and the lower-priority types as time permits. Other items that should be plotted on, or attached to, the fire control map are:

- Field artillery assets (that is, FA battalions) in the division zone and assets outside the division zone that can respond to requests from the division; for example, corps GS artillery or corps units general support reinforcing to the division but not positioned in the division zone. Range fans of each of these also are included.
- Fire support coordinating measures and maneuver control measures,
- Major friendly unit boundaries.

Operations Element

The operations element plots all friendly units and any targets that should be watched because of their serious potential to interfere with operations.

TARGET DAMAGE ASSESSMENT

Target damage assessment is necessary to determine the effectiveness of attacks. In the case of particularly dangerous or important targets, the success of the operation may hinge on determining if an attack was successful. The agency responsible for determining overall TDA requirements is the targeting team. (See FM 6-20-10.) Certain TDA will be available from organic field artillery TA assets. The best source of TDA is direct observation of the target, either from the air or from the ground. While it may not be possible to divert an aircraft to observe a target, critical targets may require the programming of an acquisition asset to accomplish TDA. This will require the identification of targets requiring TDA during the planning process so that the G2 or S2 can plan for or request the acquisition asset for TDA. Other sources of TDA include:

- Weapons-locating radars.
- Prisoner-of-war interrogation (IPW).
- Refugee and agent reports.
- Stay-behind teams.
- Captured documents, reports, and surveys of captured terrain.
- Signals intelligence (SIGINT).
- Activity analysis by intelligence personnel.

PURGING TARGETS

Purging targets is one of the most difficult aspects of the targeting problem. It is heavily dependent on understanding the tactics of the enemy and having a clear picture of the tactical situation. There is no way to produce a "cookbook" for purging targets, because the factors that drive purging are so situation- and terrain-dependent. There are some things that should be considered under any circumstances.

The increasing mobility of those forces that we may expect to face has led to a reevaluation of movement as a survival technique for those forces. In an offensive situation, self-propelled (SP) artillery may move as often as once every two missions for short distances (500 to 800 meters) to avoid counterfire. Command observation posts (COPs) in armored command and reconnaissance vehicles (ACRVs) can function completely from within their vehicles.

Similar vehicles are available for battery and battalion fire direction centers. These mobile self-contained targets will require that targeting personnel usually apply short dwell times to their locations.

Towed artillery and major unit main headquarters can be expected to remain in position for longer periods. The engineer capability to harden such targets may make them valid for longer periods than had originally been anticipated.

Rates of advance of opposing forces must be considered. Forward CPs and COPs, accompanying artillery, and maneuver units will need to be purged quickly if the rate of advance is high. Should the rate be low, such targets can be purged at the same rate as GS artillery, main headquarters, and other targets found in the division.

The dramatic increase in mobility of Threat air defense assets has made the concept of a suppression of enemy air defenses (SEAD) program for close-in air defense systems much more time-sensitive than in the past. The on-board land navigation and target acquisition systems have given short- to medium-range air defense weapons the ability to move and setup quickly.

Detailed tactics and terrain-dependent factors that determine purging criteria can come only from the intelligence elements that support the corps, division, and brigade. Purging guidance should be written down and posted in the targeting element and the fire support element. Purging guidance should reflect the time from acquisition to when the target is no longer valid. It should associate that time with a particular target or set of targets. TDA that indicates the target is no longer operating at that location should also be used to delete targets from the active file.

As targets are purged, the change in status must be reported to every element that maintains a target list or file.

MANUAL TARGET DATA PROCESSING

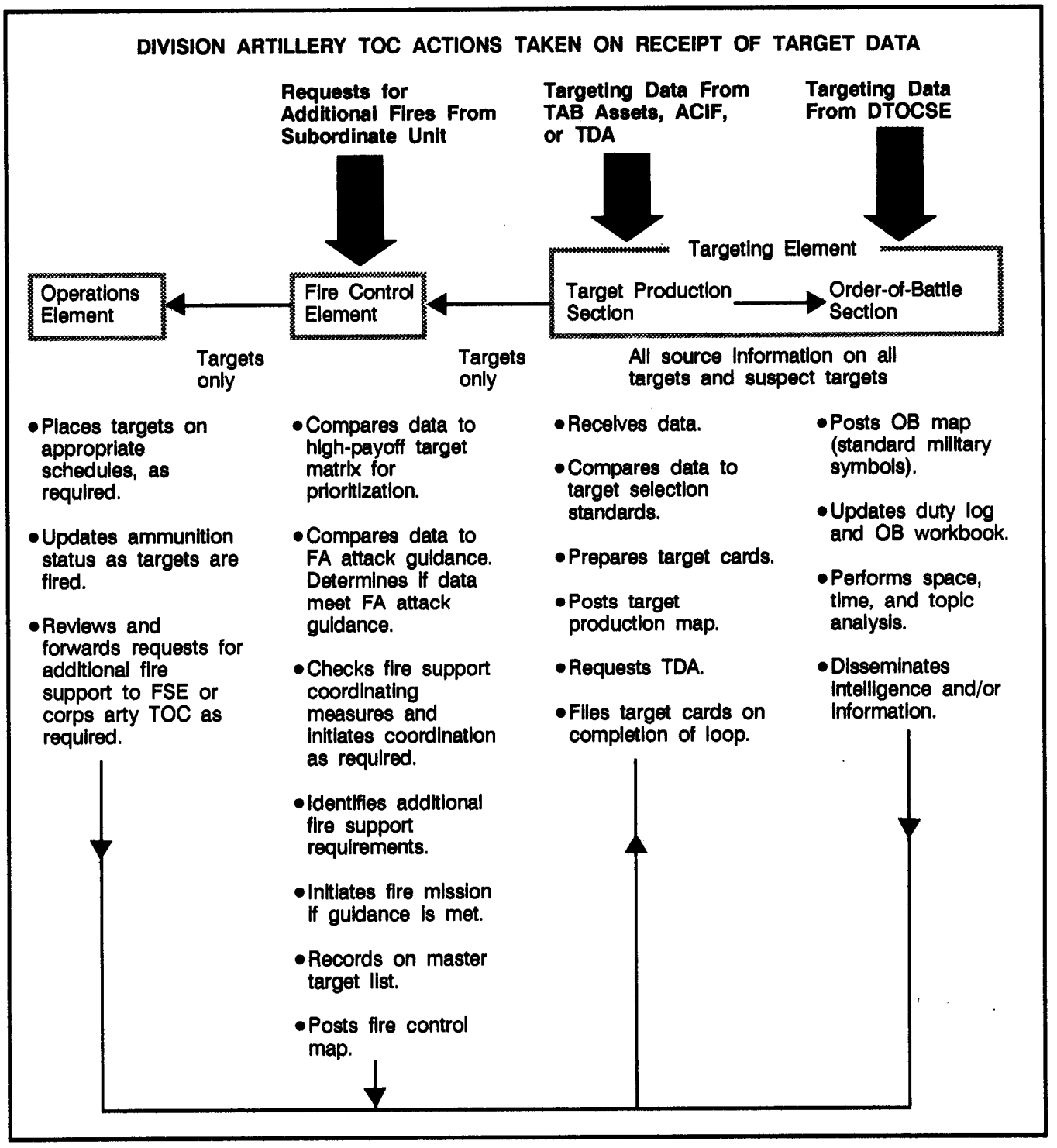

APPENDIX B

CRATER ANALYSIS AND REPORTING

Although greater reliance should be placed on reports from trained teams, all personnel should know how to analyze craters and make the proper report. Since crater analysis teams are not authorized by TOE, each unit (including units normally located in rear areas) should select and train at least one team of two or three members. To adequately support their maneuver unit, fire support personnel must know how to analyze and report crater information.

GUN AND HOWITZER SHELL CRATER ANALYSIS

The projectile direction of flight can be determined fairly accurately from the projectile crater or ricochet furrow. It is possible to obtain the azimuth of a ray that will pass through or near the enemy position by accurately locating the crater and determining the direction of flight. While it is possible to determine the direction to the firing weapons from one crater or ricochet furrow, an enemy firing unit maybe located by plotting the intersection of the average azimuths from at least three widely separated groups of craters.

In crater analysis, differences in angle of fall, projectile burst patterns, directions of flight, and time fuze settings will help distinguish between enemy weapons firing on a given area.

Refer to FM 3-3 for guidance on friendly troop safety from the effects of craters contaminated with chemical agents. Refer to FM 3-3 also for guidance in marking craters containing chemical, biological, or radiological contamination.

Value of Analysis

By analyzing shell craters, the crater analysis team can –

- Verify, as confirmed locations, suspected locations that have been obtained by other means.
- Confirm the presence of enemy artillery, rockets, or mortars and obtain an approximate direction to them.
- Detect the presence of new types of enemy weapons, new calibers, or new ammunition man-ufacturing methods.

Inspection of Shelled Areas

Shelled areas must be inspected as soon as possible after the shelling. Craters that are exposed to the elements or are abused by personnel deteriorate rapidly and thereby lose their value as a source of information.

SURVEY OR CRATER LOCATION

Areas must be located accurately enough for plotting on charts, maps, or aerial photographs. Deliberate survey is not essential; hasty survey techniques or map spotting will usually suffice. Direction can be determined by use of an aiming circle or a compass.

DETERMINATION OF DIRECTION

Pattern

A clear pattern produced on the ground by a detonating shell indicates the direction from which the shell came.

Factors Affecting Pattern

Because of terrain irregularities and soil conditions, typical shell crater patterns are the exception, not the rule. Side spray marks are a principal part of the pattern caused by fragmentation. Base spray is negligible from gun and howitzer projectiles but is appreciable from mortars. The width, angle, and density of the side spray pattern vary with the projectile, angle of impact, type of fuze, terminal velocity of the projectile, and soil composition.

In determining direction, the following must be considered:

- Effect of stones, vegetation, stumps, and roots in the path of the projectiles.
- Variations in density and type of soil.
- The slope of the terrain at the point of impact.

From any group, only the most clearly defined and typical craters are used.

Marks on Vegetation and Other Objects

Marks made by a round as it passes through trees, snow, and walls often indicate the direction from which the round was fired. The possible deflection of the shell upon impact with these objects must be considered. Evidence of such deflection should not be overlooked.

Drift and Wind Effects

Drift and lateral wind effects do not materially change the direction of the shell axis during flight.

Ricochet Furrows

Often, when an artillery round with a delay fuze is fired at low angle, it bounces or ricochets from the surface of the earth. In doing so, it creates a groove, which is called a ricochet furrow. This groove is an extension of the direction of fire. Care must be taken, however, to determine that the shell was not deflected before or while it was making the furrow.

CRATER ANALYSIS

The initial step in crater analysis is to locate a usable crater for use in determining the direction to the hostile weapon. The crater should be reasonably fresh and clearly defined on the ground. Since the crater is the beginning point for plotting the direction to the enemy weapon, the grid coordinates of the crater should be determined as precisely as time and the method used will allow. The direction to the firing weapon must be determined by one of the methods described below, depending on the angle of the trajectory and type of fuze fired. Shell fragments must be collected for use in identifying the type and caliber of the weapon.

LOW-ANGLE FUZE QUICK CRATERS (ARTILLERY)

The detonation of a low-angle fuze quick projectile causes an inner crater. The burst and momentum of the shell carry the effect forward and to the sides, forming an arrow that points to the rear (toward the weapon from which the round was fired). The fuze continues along the line of flight, creating a fuze furrow. There are two methods of obtaining a direction to a hostile weapon from this type of crater. These are the fuze furrow and center of crater method and the side spray method. The best results are obtained by determining a mean, or average, of several directions obtained by using both methods.

Fuze Furrow and Center of Crater Method

In the fuze furrow and center of crater method, one stake is placed in the center of the crater and another is placed in the furrow at the point where the fuze was blown forward to the front of the crater. A direction-measuring instrument is set up in line with the two stakes, and the direction to the hostile weapon is measured. A variation of this method is to place a stake where the shell entered the ground instead of in the fuze furrow and determine the direction in the same manner. This variation method is rarely possible, however, since indications of the point of entry are usually destroyed by the explosion of the shell. The five steps of the fuze furrow and center of crater methods are as follows:

- Place a stake in the center of the crater.
- Place a second stake in the fuze furrow.
- Set up a direction-measuring instrument in line with the stakes and away from fragments.
- Orient the instrument.
- Measure the direction to the hostile weapon.

FUZE FURROW AND CENTER OF CRATER METHOD

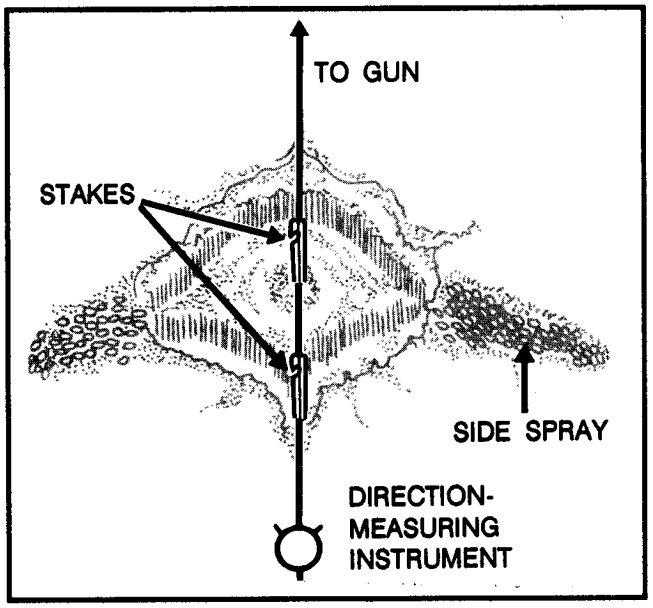

Side Spray Method

Another method used to measure the direction to a hostile weapon is to bisect the angle formed by the lines of side spray. The seven steps in measuring the direction of a fuze quick crater by the side spray method are as follows:

- Place a stake in the center of the crater.
- Place two stakes, one at the end of each line of side spray, equidistant from the center stake.
- Hold a length of communications wire (or another appropriate field-expedient means) to each side spray stake, and strike an arc forward of the fuze furrow.
- Place a stake where these arcs intersect.
- Set up a direction-measuring instrument in line with the center stake and the stake at the intersection of the arcs.
- Orient the instrument.
- Measure the direction to the firing weapon.

SIDE SPRAY METHOD

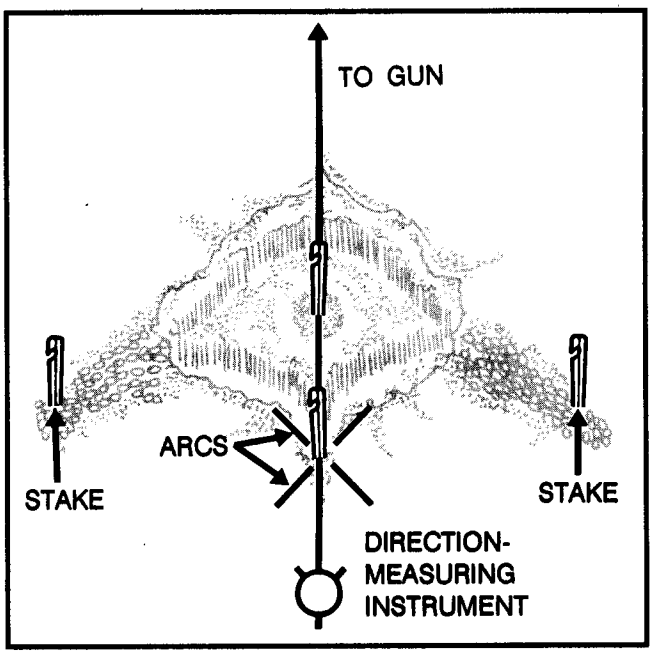

LOW-ANGLE FUZE DELAY CRATERS (ARTILLERY)

There are two types of low-angle fuze delay craters — ricochet and mine action.

Ricochet Craters

The Projectile enters the ground in a line following the trajectory and continues in a straight line for a few feet, causing a ricochet furrow. The projectile then normally deflects upward. At the same time, it changes direction. The change of direction usually is to the right as the result of the spin, or rotation, of the projectile. The effect of the airburst can be noted on the ground. Directions obtained from ricochet craters are considered to be the most reliable. The five steps required to determine direction from a ricochet furrow are as follows:

- Clean out the furrow.
- Place a stake at each end of a usable straight section of the furrow.
- Set up a direction-measuring instrument in line with the stakes and away from fragments.
- Orient the instrument.
- Measure the direction to the weapon.

Mine Action Crater

Mine action occurs when a shell bursts beneath the ground. Occasionally, such a burst will leave a furrow that can be analyzed in the same manner as the ricochet furrow. A mine action crater that does not have a furrow cannot be used to determine the direction to the weapon.

HIGH-ANGLE SHELL CRATERS (MORTARS)

In a typical high-angle mortar crater, the turf at the forward edge (the direction away from the hostile mortar) is undercut. The rear edge of the crater is shorn of vegetation and grooved by splinters. When fresh, the crater is covered with loose earth, which must be carefully removed to disclose the firm burnt inner crater. The ground surrounding the crater is streaked by splinter grooves that radiate from the point of detonation. The ends of the splinter grooves on the rearward side are on an approximately straight line. This line is perpendicular to the horizontal trajectory of the round. A fuze tunnel is caused by the fuze burying itself at the bottom of the inner crater in front of the point of detonation. Three methods may be used to determine direction from a high-angle mortar shell crater — main axis, splinter groove, and fuze tunnel.

RICOCHET FURROW METHOD

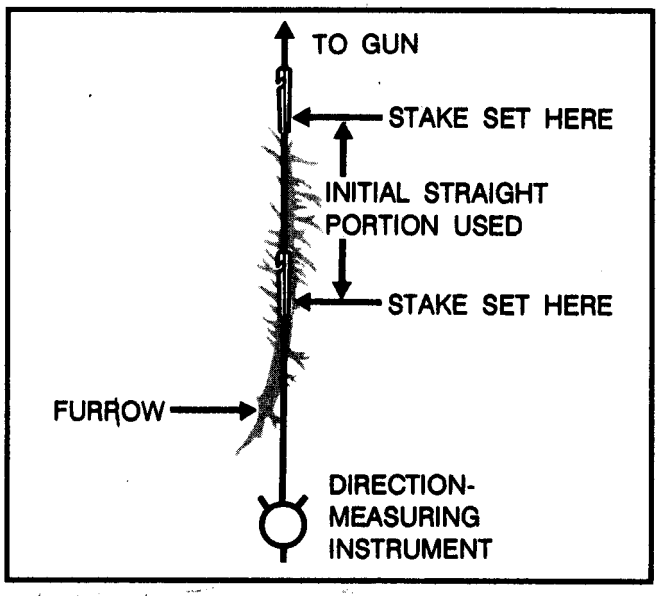

Main Axis Method

The four steps used to determine direction by the main axis method are as follows:

- Lay a stake along the main axis of the crater, dividing the crater into symmetrical halves. The stake points in the direction of the mortar.
- Set up a direction-measuring instrument in line with the stake and away from fragments.
- Orient the instrument.
- Measure the direction to the weapon.

MAIN AXIS METHOD

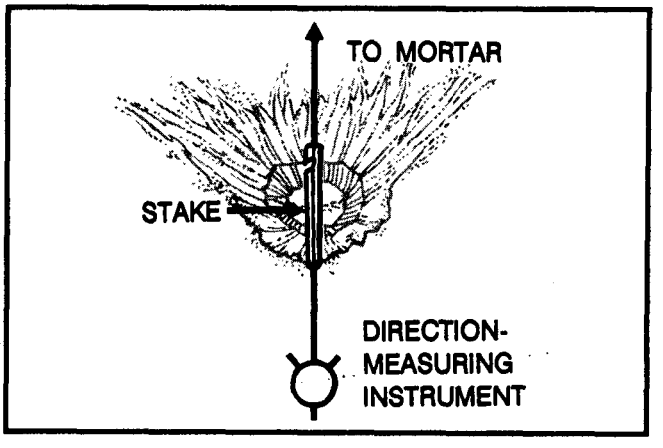

SPLINTER GROOVE METHOD

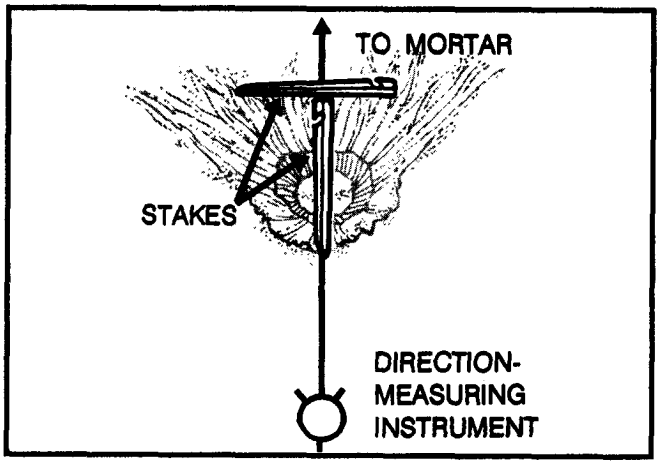

Splinter Groove Method

The five steps used to determine direction by the splinter groove method are as follows:

- Lay a stake along the ends of the splinter grooves that extend from the crater.
- Lay a second stake perpendicular to the first stake through the axis of the fuze tunnel.
- Set up a direction-measuring instrument in line with the second stake and away from fragments.
- Orient the instrument.
- Measure the direction to the weapon.

Fuze Tunnel Method

The four steps used to determine direction by the fuze tunnel method are as follows:

- Place a stake in the fuze tunnel.
- Set up a direction-measuring instrument in line with the stake and away from fragments.
- Orient the instrument.
- Measure the direction to the weapon.

NOTE: If the angle of fall is too great (a 90° angle), the fuze tunnel method cannot be used.

FUZE TUNNEL METHOD

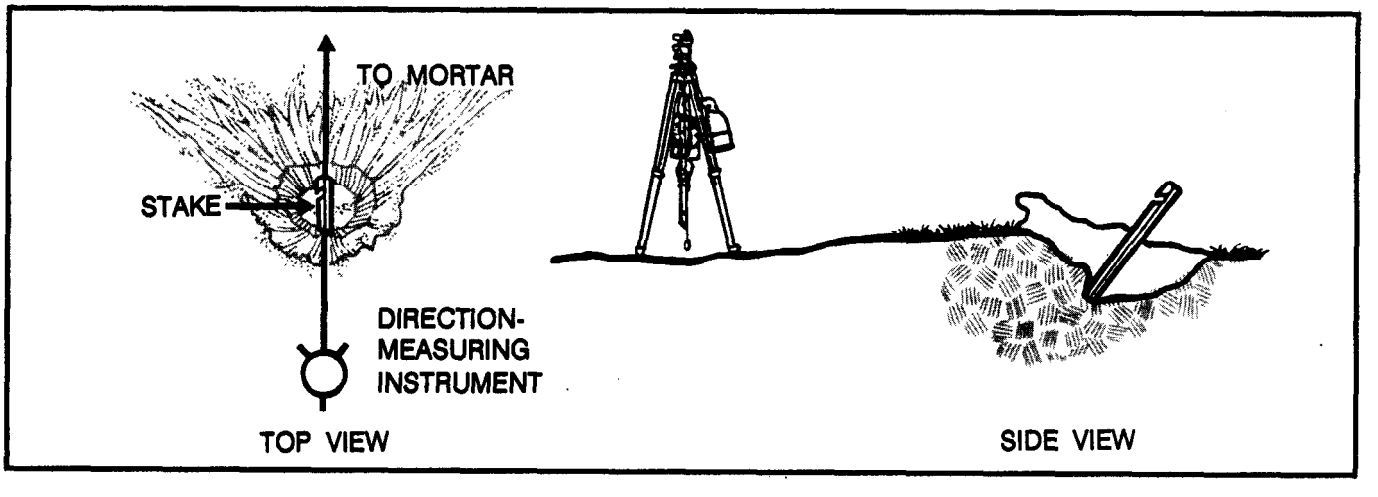

ROCKET CRATERS

A rocket crater resulting from a rocket impacting with a low or medium angle of fall is analyzed in the same manner as an artillery crater resulting from a projectile armed with fuze quick. However, if the rocket impacts with a high angle of fall, the crater is analyzed in the same manner as a crater resulting from a mortar round fired with fuze quick. (See paragraph on low-angle fuze quick craters.) The tail fins, rocket motor, body, and other parts of the rocket may be used to determine the caliber and type of rocket fired.

SHELL FRAGMENT ANALYSIS

Identification by weapon type and caliber may be determined from shell fragments found in shell craters. Dimensions of the parts, as well as those of the complete shell, vary according to the caliber and type of shell.

Duds and Low-Order Bursts

The most logical means of identifying the caliber of a projectile is to inspect a dud of that caliber. However, since a dud may not always be available or maybe too dangerous to handle, a low-order burst is the next best means of identification. When the explosive filler is not completely detonated, a low-order burst occurs and large shell fragments result. Such large pieces can be used to identify thread count, curvature, wall thickness, and so forth.

High-Order Bursts

A high-order burst normally results in small deformed fragments. These fragments are useless for identification purposes unless they include a section of either the **rotating band** or the **rotating band seat.** Fragments of either of these sections positively identify the shell, since each shell has its own distinctive rotating band markings.

TYPICAL SHELL

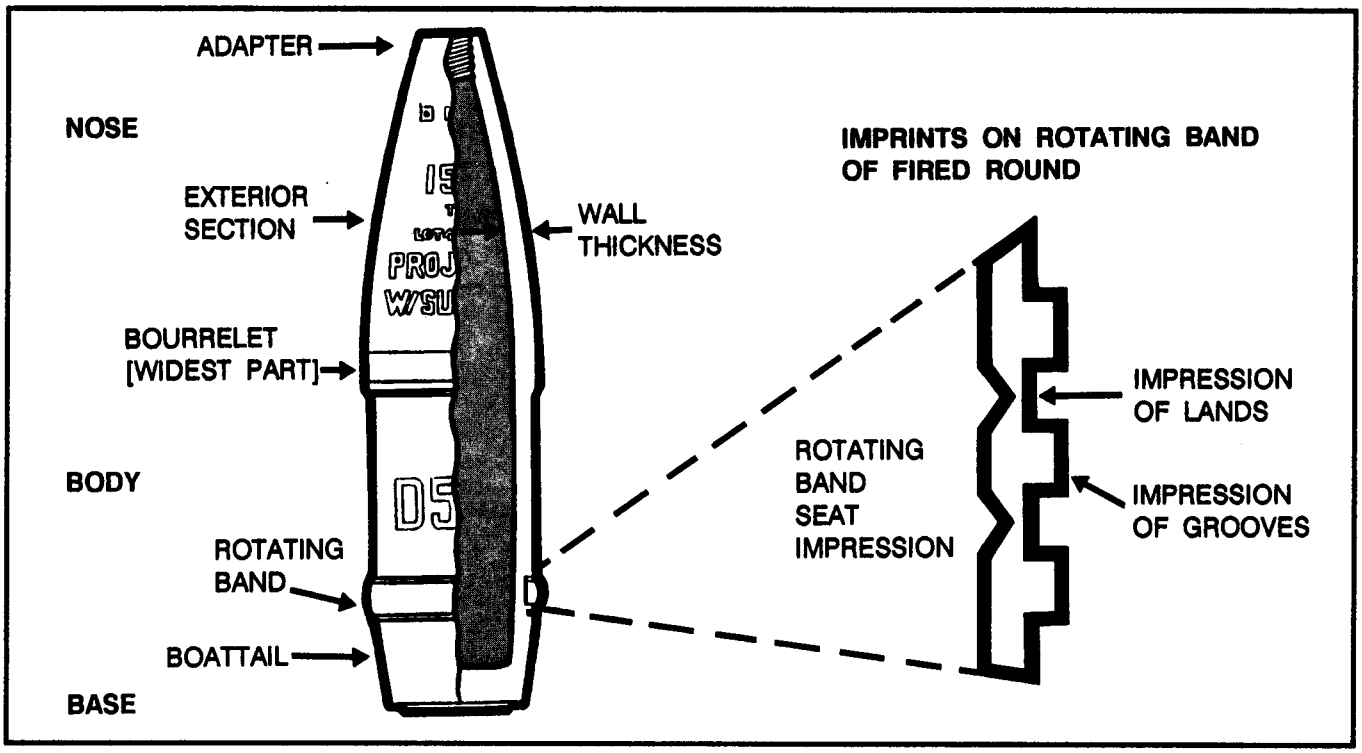

Rotating Bands and Band Seats

A shell may be identified as to caliber, type, and nation of origin from the –

- Pattern or rifling imprints on rotating bands.
- Width, number, and size of rotating bands.
- Dimensions and pattern of keying or knurling on the rotating band seat.
- Dimensions and pattern of rotating band seat keying and knurling impressed on the rotating band.

For a discussion of interior ballistics and how rifling imprints are made on rounds as they are fired, see TC 6-40.

NOTE: US and Soviet artillery require a rotating band or band seat for spin-stabilized projectiles.

SHELL FRAGMENT AND TAIL FIN IDENTIFICATION, US AMMUNITION

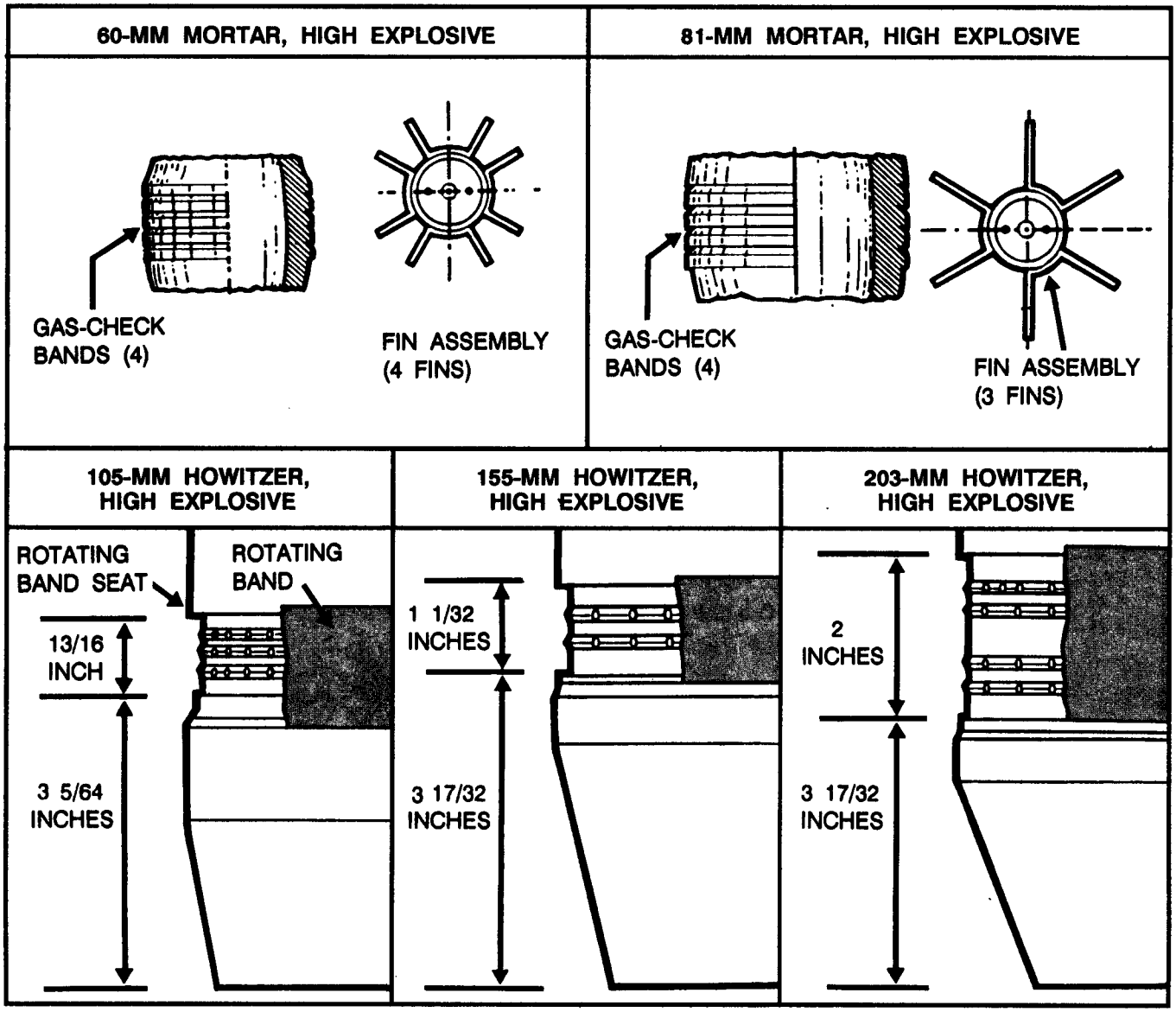

NOTE: Except for the rotating bands and band seats of the tail fins, different types of shells may be identical in one dimension (such as wall thickness) but seldom will be alike in two or more dimensions. Therefore, it is necessary to obtain two or more dimensions to make a positive identification.

Tail Fins

A mortar can be identified from the tail fins. Tail fins often are found in the fuze tunnel of the crater. A mortar that is not fin-stabilized may be identified from the pieces of the projectile on which the rifling is imprinted.

Fuzes

Since the same type of fuze may be used with several different calibers or types of projectiles, it is impossible to establish the type and caliber of a weapon by this means.

SOVIET AMMUNITION

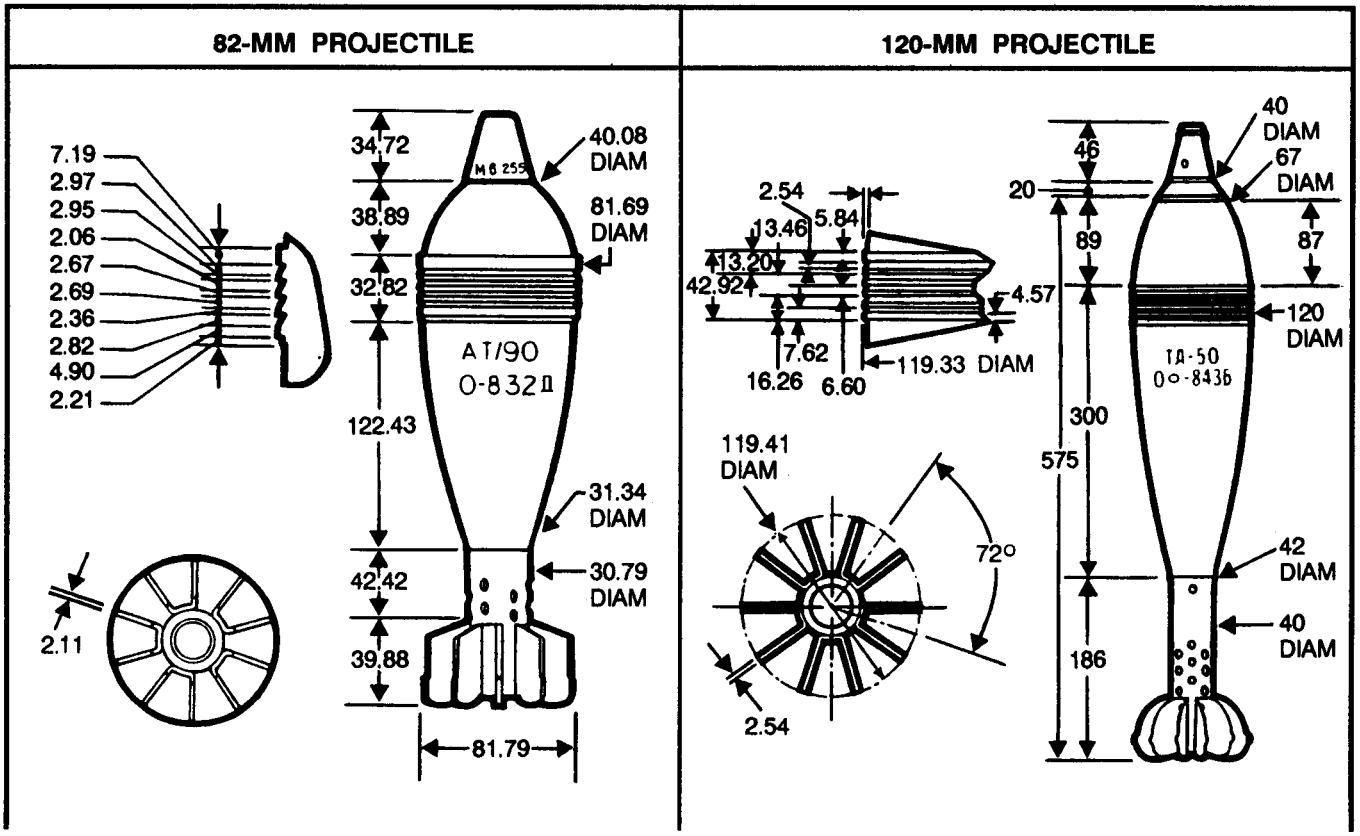

SOVIET AMMUNITION (Continued)

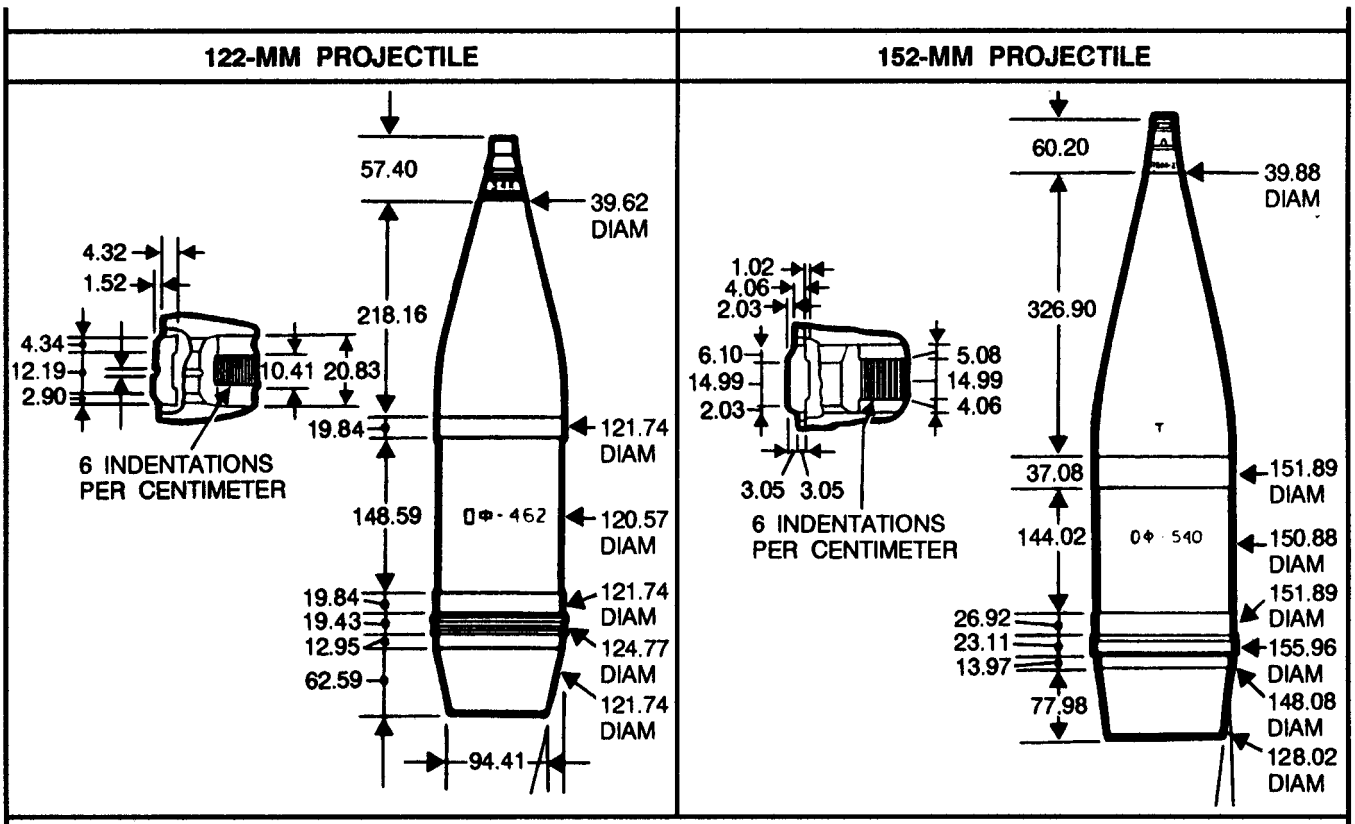

NOTE: All dimensions in millimeters. To convert to inches, multiply millimeters by 0.03937.

LEGEND: DIAM = diameter

This section implements STANAG 2008, Edition 6, and QSTAG 503, Edition 1.

SHELLING REPORTS

The div arty is responsible for counterfire. Therefore, bombing reports (BOMREPs), SHELREPs, MORTREPs, and rocketing reports (ROCKREPs) should be forwarded as quickly as possible to the div arty TOC through either fire direction or fire support channels. If a report is received by a DS battalion and that battalion decides to attack a target developed from it, the report of action taken and a target damage assessment, if available, should be forwarded to the div arty TOC when the action is completed.

ARTILLERY COUNTERFIRE INFORMATION FORM

The information obtained from a crater should be forwarded by the most rapid available means in the format of DA Form 2185-R. The artillery counterfire information form standardizes reporting procedures and complies with STANAG 2008 and QSTAG 503. **No matter how little information has been obtained, do not hesitate to forward the information.** Fragmentary or incomplete information (a radio or telephone report) is often of value in supplementing or confirming existing information. This radio or telephone report may be followed by a written report on DA Form 2185-R.

EXAMPLE

The information in the following situation is illustrated on the completed DA Form 2185-R. You are the executive officer of Battery A, 1st Battalion, 3d Field Artillery, located at grid 392841. Your call sign is A3F22. At 0545, the enemy shelled your position for 2 minutes with a total of eight rounds of high explosive (HE). The tempo and pattern of bursts suggest an enemy four-gun battery. Your battery commander believes that the enemy intent is harassment. Your SHELREP team determines the direction to the enemy battery to be 4,810 mils (~~m~~). The team also located a fragment that includes a part of the rotating band seat. The shell was identified as an enemy 122-mm howitzer projectile.

The SHELREP team makes entries on the DA Form 2185-R. However, personnel do not complete the four blanks in the heading of the form. (The receiving agency completes these blanks; for example, the battalion S2 section.)

Information in Columns B and K of Section I is encoded for security reasons. The current call sign or code name for the unit is entered in Column A. Column B is not applicable when this form is used for crater analysis.

Sections II and III are completed in the target production section of the div arty TOC.

COMPLETED DA FORM 2185-R

ARTILLERY COUNTERFIRE INFORMATION
(For use of this form, see FM 6-121. The proponent agency is TRADOC.)

RECEIVED BY	FROM	TIME	NUMBER

SECTION I - BOMREP, SHELREP, MORTREP, OR ROCKREP (Cross out items not applicable.)

UNIT OF ORIGIN (Current call sign address group or code name)	POSITION OF OBSERVER (Encode if HQ or important OP or if Column F gives info on loction)	DIRECTION (Grid bearing of FLASH, SOUND, or GROOVE of SHELL [state which] in mils unless otherwise stated). (Omit for aircraft)	TIME FROM	TIME TO	AREA BOMBED, SHELLED, OR MORTARED (Grid ref [in clear] or grid bearing to impact in mils and distance from observer in meters [encoded]) (Dimension of the area in meters) by (the radius) or (length and width)	NUMBER AND NATURE OF GUNS (Mortars, rocket launchers, aircraft, or other methods of delivery)	NATURE OF FIRE (Adjustment, fire for effect, or harassing) (May be omitted for aircraft)	NUMBER, TYPE, AND CALIBER (State whether measured or assumed) OF SHELLS, ROCKETS (or MISSILES), AND BOMBS MEASURED	TIME OF FLASH-TO-BANG (Omit for aircraft)	DAMAGE (Encode if required)
F22	NA	4810 ~~m~~	0545	0547	392841	4 / ARTY	H	8 / HE / 122	NA	NA
A	B	C	D	E	F	G	H	I	J	K

	SECTION II - LOCATION REPORT						SECTION III - COUNTERFIRE ACTION		
REMARKS	SERIAL NUMBER (Each location that is produced by a locating unit is given a serial number)	TARGET NUMBER (If the weapon or activity has previously been given a target number, it will be entered here)	POSITION OF TARGET (The grid reference or grid bearing and distance of the located weapon or activity)	ACCURACY (The accuracy to which the weapon was located. CEP in meters and the means of location if possible)	TIME OF LOCATION (Actual time the location was made)	TARGET DESCRIPTION (Dimensions if possible): 1. Radius of target 2. Target length and width in meters	TIME FIRED (Against hostile target)	FIRED BY	NUMBER OF ROUNDS, TYPE OF FUZE, AND PROJECTILES
L	M	N	P	Q	R	S	T	U	V

DA FORM 2185-R, 1 APR 90 (Conforms with STANAG 2008) Edition of 1 May 78 is obsolete.

NOTE: A reproducible copy of DA Form 2185-R is furnished at the end of this book.

Any usable fragments obtained from crater analysis should be tagged and sent to the battalion S2. As a minimum, the tag should include the following information:

- Location of the crater.
- Direction to the hostile weapon.
- Date-time group of the shelling.

The information contained in a SHELREP is forwarded by the DS artillery S2 to the counterfire officer (CFO) at div arty, On a SHELREP overlay, the CFO plots the location of the crater and a line representing the direction measured to the weapon. He compares the information with that received from other sources and tries to locate enemy weapons from the intersections of direction lines to weapons of the same caliber.

EQUIPMENT

Three elements– direction, dimensions, and curvature–must be measured for crater analysis. The equipment used by the crater analysis team should consist of the following items:

- Aiming circle (M2 compass), stakes, and communications wire to obtain the direction from the crater to the weapon that fired the projectile.
- A curvature template to measure the curvature of the fragment to determine the caliber of the shell. The template can be constructed of heavy cardboard, acetate, wood, or other appropriate material.
- Defense Intelligence Agency Projectile Fragment Identification Guide for measuring fragment dimensions (DST-1160-G-029-85, with Change 1, dated 27 Jan 89).

CURVATURE TEMPLATE

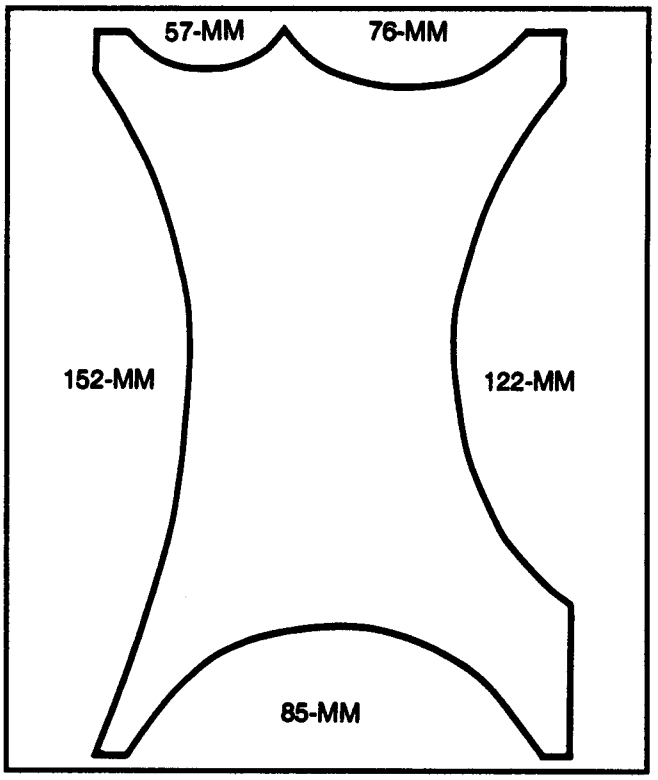

APPENDIX C

FIREFINDER FRIENDLY FIRE AND FIELD EXERCISE MODES

This appendix addresses the subjects of friendly fire radar gunnery and the Firefinder field exercise mode (FEM). Both are radar gunnery functions. The important difference, however, is that the FEM is used exclusively for training purposes and is not an operational mode. Its primary purpose is to give operators experience in locating and processing targets without the need for live fire.

Section I. FRIENDLY FIRE RADAR GUNNERY

FIREFINDER MISSIONS

The secondary mission of Firefinder radars is to support friendly firing elements. The secondary mission is performed in combat only when the commander deems it absolutely necessary. The reason is that the secondary mission takes the radar away from its primary mission of locating hostile weapons. Also, it exposes the radar to possible location by hostile EW systems for other than its primary mission. In the friendly fire operational mode, Firefinder radars can provide accurate actual burst, datum-plane, or predicted-impact location data. These data allow the firing elements to determine registration corrections for nonstandard conditions. Because the radar cannot radiate in friendly fire mode and hostile fire mode at the same time, the commander must issue specific guidance as to when and how friendly fire mode will be used. This determination depends on the factors of METT-T, with the threat of enemy acquisition capabilities being a primary consideration

FRIENDLY FIRE MODE

When operating in the friendly fire mode, the Firefinder radar sets up a horizontal "window" through which the projectile must pass. The window is referred to as the friendly fire search fence as shown on the next page. For operation in friendly fire mode, the normal search fence of 1,600 mils (used in the hostile fire mode) is focused to a width of approximately 440 mils. The narrowed search fence provides the best probability of detecting rounds fired. The radar tracks a projectile until an airburst is detected, the selected datum plane altitude is intersected, or the radar has enough data to predict the point of impact.

In the optimum radar tracking situation for a friendly fire mode mission, the angle (angle T) made by the radar-orienting point (radar-target) line and the gun-orienting point (gun-target) line is from 800 to 1,200 mils.

Before the Firefinder radars can conduct a mission in friendly fire mode, specific information must be stored in the friendly fire buffer of the radar computer. Data required in the friendly fire buffer are as follows:

- Submode type of mission.
- Battery location (casting, northing, and altitude).

PROJECTILE TRACKING-FIREFINDER RADARS

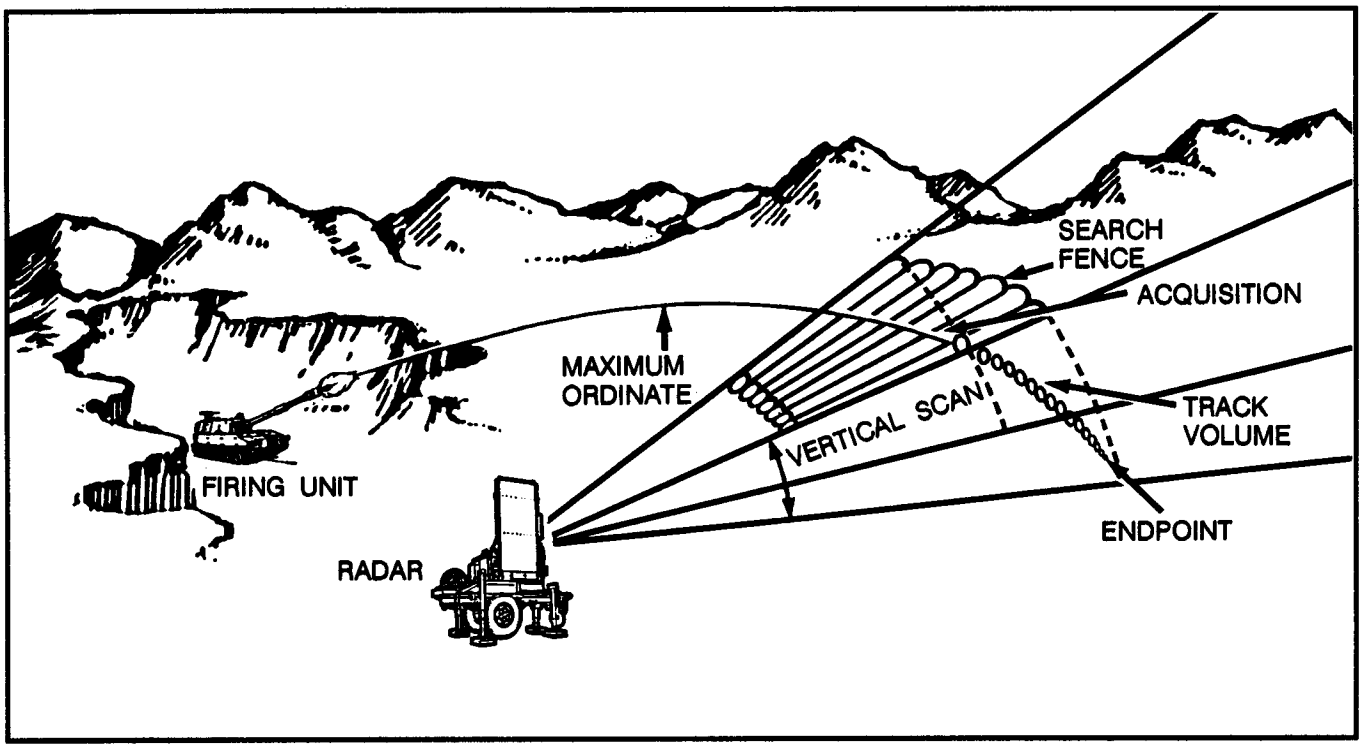

- Registration point location (casting, northing, and altitude).
- Maximum ordinate of the trajectory to the nearest meter from the appropriate tabular firing table (TFT) (maximum ordinate above gun).
- Quadrant elevation or fall angle from the TFT (Table G).
- TACFIRE target number.

Orienting data required for the friendly fire buffer and for the actual conduct of the mission are contained in the TACFIRE FM;INTM and follow-up messages to observer. In nondigital operations, the orienting data are transmitted by voice to the radar on VHF-FM radios. Time of flight is part of the orienting data required to minimize radiation time.

NOTE: See TC 6-40 and TC 64A for more details on orienting data.

Up to three sets of friendly fire buffer data can be stored in computer memory for later use. When the required data listed above are entered, the computer will either accept the search fence or reject it by showing an error message to the operator. The radar operator must then coordinate with the firing unit for adjustments to the firing data or orienting point that will allow the radar to observe the rounds in the friendly fire mode.

In friendly fire mode, the radar can perform three types of missions:

- Observe a high-burst (HB) registration (artillery airburst mode).
- Predict impact locations (artillery impact-predict mode).

- Observe a datum-plane registration (artillery datum-plane mode).

These friendly fire mode missions support the two types of registrations conducted by the FDC. The radar high-burst registration provides "did hit" observations for the FDC high-burst registration. The radar impact-predict and datum-plane registrations provide "did hit" observations for the FDC mean-point-of-impact (MPI) registration. The MPI calculations by the FDC differ for the two types of radar observation, because they correspond to different orienting points. All of these calculations are discussed in detail in TC 6-40.

HIGH-BURST REGISTRATION

For a high-burst registration, the high-burst altitude above the registration point is the actual orienting point for the radar. The radar must be able to observe this point and begin tracking the trajectory of the round at least 350 meters before the burst. This is to ensure the radar can track the round to the burst point. If the radar cannot observe the orienting point, the radar operator will be notified by an error message. The radar section must then coordinate with the firing unit to select a new high-burst altitude (or orienting point for the radar) that meets the technical tracking criteria of the radar. The grid coordinates and altitude of each observed burst are passed to the firing unit by the radar operator. The firing unit must then determine registration corrections as it would for a regular high-burst registration.

IMPACT-PREDICT REGISTRATION (MEAN POINT OF IMPACT)

In an impact-predict mission, the radar uses the friendly fire mode to track the round on its descending trajectory toward the registration point and to predict where the round will impact without actually observing the ground burst. To provide data, the radar must track the round along its trajectory for a sufficient distance (350 meters) above the radar screening crest. If the radar cannot track the round far enough along its trajectory, it will notify the operator that it has limited track coverage. Coordination must then be made with the firing unit to end the mission or to continue it by selecting anew registration point. The predicted burst locations are reported to the FDC, which then averages them as "did hit" data and compares them to the fired "should hit" data of the registration point to obtain MPI registration corrections.

DATUM-PLANE REGISTRATION (MEAN POINT OF IMPACT)

The datum-plane registration is a lesser-used capability of the Firefinder radars. The FDC selects a registration point; for example, a grid intersection. The altitude for the datum-plane registration is the altitude of a selected horizontal datum plane above the registration point through which all rounds will pass. The radar must be able to observe the rounds in flight as they pass through this altitude. In calculating firing data, the FDC uses the altitude of the datum plane as the altitude of the registration point. If the radar cannot track along the trajectory for a sufficient distance to its datum-plane orienting point, the same error messages will be displayed to the operator as for a high-burst registration. The firing unit must then adjust the altitude of the target. When the radar observes the registration rounds, the coordinates reported to FDC are those of each penetration or intersection point of the datum plane at the datum plane altitude rather than the predicted location of impact. The FDC corrects the "should hit" data by the altitude difference between the datum plane and the actual registration point. The FDC must then compute registration corrections in the same way it would to obtain "did hit" data for an MPI registration.

FRIENDLY FIRE LOG

The radar operator and radiotelephone operator (RATELO) use DA Form 5310-R (Firefinder Friendly Fire Log) to record all the pertinent data for any type of friendly fire operation. The form is designed to be used with either a digital or a conventional FDC; however, it will not always be necessary to use DA Form 5310-R. When the friendly fire mission is transmitted by digital means, all messages sent and received by the radar are recorded by the electronic line printer (ELP). The DA Form 5310-R should be used anytime a friendly fire mission is sent by voice.

NOTE: A reproducible copy of DA Form 5310-R is at the back of this book.

Message to Observer

When the RATELO receives a warning order, he checks the appropriate box in Block 1 of SECTION I and enters the complete firing unit call sign and date-time group.

He then enters (in Blocks 2, 3, and 4) the orienting data furnished by the FDC. The M (meters) or F (feet) block should be marked to help eliminate errors.

The radar operator can then select a buffer and load the friendly fire data into the computer. If the radar rejects the data, mark the appropriate box in Block 6 and take corrective action.

MESSAGE TO OBSERVER

FIREFINDER FRIENDLY FIRE LOG
(TO BE USED WITH AN/TPQ-36/AN/TPQ-37)
For use of this form, see FM 6-121. The proponent agency is TRADOC.

SECTION I. MESSAGE TO OBSERVER

BLOCK				
1	RADAR MODE (CHECK APPROPRIATE BOX)			
	☐ AA: ARTILLERY, AIRBURST	☑ AI: ARTILLERY IMPACT PREDICT	☐ MI: MORTAR IMPACT PREDICT	
	☐ AD: ARTILLERY DATUM PLANE	☐ MD: MORTAR DATUM PLANE		
	UNIT W3B69		DATE-TIME GROUP 231345Z MAY 90	
2	UNIT LOCATION	EASTING 651322	NORTHING 3884988	ALTITUDE 140 ☑ F
3	TARGET LOCATION ENDPOINT	EASTING 658850	NORTHING 3887400	ALTITUDE 100 ☑ F
4	MAXIMUM ORDINATE (HEIGHT ABOVE BATTERY ALTITUDE) 870 ☑ F		QUADRANT ELEVATION 480	
	TARGET NUMBER AC1423			
5	BUFFER NUMBER (CIRCLE ONE) (1) 2 3			
6	FRIENDLY FIRE SEARCH FENCE (FFSF) ERROR MESSAGES (CHECK APPROPRIATE BOX(ES))			
	☐ ENDPOINT BEYOND 30 KM (Q-37)/24 KM (Q-36)	☐ TRAJECTORY INCORRECT	☐ ENDPOINT ____ M ABOVE MAXIMUM	
	☐ ENDPOINT INSIDE 3 KM (Q-37)/1 KM (Q-36)	☐ ENDPOINT ABOVE MAXIMUM ORDINATE	☐ ENDPOINT ____ M BELOW MINIMUM	
		☐ LIMITED TRACK COVERAGE		

SECTION II. MESSAGE TO FDC

(CHECK APPROPRIATE BOX(ES))

Message to FDC

Once the computer accepts the orienting data, the RATELO sends a message to the FDC that the radar is ready to observe. The appropriate boxes in SECTION II for the commands used should be checked to indicate how the mission will be controlled.

MESSAGE TO FDC

☐ LIMITED TRACK COVERAGE

SECTION II. MESSAGE TO FDC

(CHECK APPROPRIATE BOX(ES))

☐ AT MY COMMAND ☑ REQUEST SPLASH ☑ READY TO OBSERVE

☑ REQUEST SHOT ☐ REPORT WHEN READY ☐ ONE GUN

RECORD AND REPORT TO FDC

Record and Report to FDC

As each round is detected the RATELO records it in SECTION III. If digital communications are not being used, the RATELO will transmit these data to the FDC.

RECORD AND REPORT TO FDC

☐ REPORT WHEN READY

SECTION III. RECORD AND REPORT TO FDC

ROUND NUMBER	EASTING a	NORTHING b	ALTITUDE c	M / F	METHOD SENT d	TIME SENT e	ACKNOWLEDGED f
1	658897	3887354	97		VOICE	1359	✓
2	658853	3887354	100		"	1400	✓
3	658875	3887406	96		"	1402	✓
4	658829	3887456	98		"	1403	✓
5	658839	3887518	96		"	1405	✓
6	658773	3887202	107		"	1407	✓
7	658840	3887410	100		"	1411	✓
8							
9							

REMARKS

TIME END OF MISSION RECEIVED 1412

MISSION OBSERVED BY BOWER

DA FORM 5310-R

Section II. FIREFINDER FIELD EXERCISE MODE

USES

The Firefinder FEM program is a valuable tool for combat training in both peace and war. It can be used to train not only the radar section but also the entire gunnery team. Simulated targets in the FEM program allow the radar to locate (generate) and process targets without the need for live-fire acquisition. The targets generated in the FEM are identical to targets produced in the operational modes. The FEM program for the AN/TPQ-36 contains 100 simulated targets, and the FEM program for the AN/TPQ-37 contains 150 simulated targets.

SECTION AND/OR PLATOON TRAINING

The FEM program allows radar sections to train for both hostile and friendly fire missions in either a field or a garrison location. The radar operator is required to process the FEM-generated targets just as he would targets acquired by the radar in the operational modes. Through the simulation of TACFIRE in the FEM program, a target can be transmitted and an acknowledgment received. This allows the section to train without actual TACFIRE support.

GUNNERY TEAM TRAINING

The entire gunnery team can benefit from the use of the FEM program during rehearsals before the conduct of actual operations or during command post exercises (CPXs), live-fire training, and maneuver exercises. During command post and maneuver exercises, the command element can select targets that reflect the tactical situation of the exercise by using an overlay on which the FEM targets are plotted. Sequential actions taken by each element training are discussed below.

Command or Exercise Control Element

The command or exercise control element determines commander's priority guidance for radar, radar search data, cueing agents, and cueing guidance. These determinations are based on–

- The scenario.
- Factors of METT-T.
- Intelligence estimates.
- Target value analysis (TVA).
- High-payoff target lists.
- Commander's attack guidance.
- Targeting priorities.
- The FEM target overlay.

All of these are used as exercise source documents.

The FEM overlay should have all the FEM targets for the particular radar plotted on it. The overlay creates a 1,600-mil fan that the command or control element can rotate to any azimuth required by the situation. Initial search data for the radar are determined from situational information and are transmitted to the radar. (See the sample FEM overlay on page C-7.) As the tactical situation changes and on the basis of operational guidance issued by the command or control element, new search data and priority guidance are determined and sent to the radar. The command or control element also notifies the radar section what FEM targets to enable (generate).

Cueing Agents

Cueing agents designated by the command or control element must be able to identify the cueing criteria required and the method they

SAMPLE FEM OVERLAY

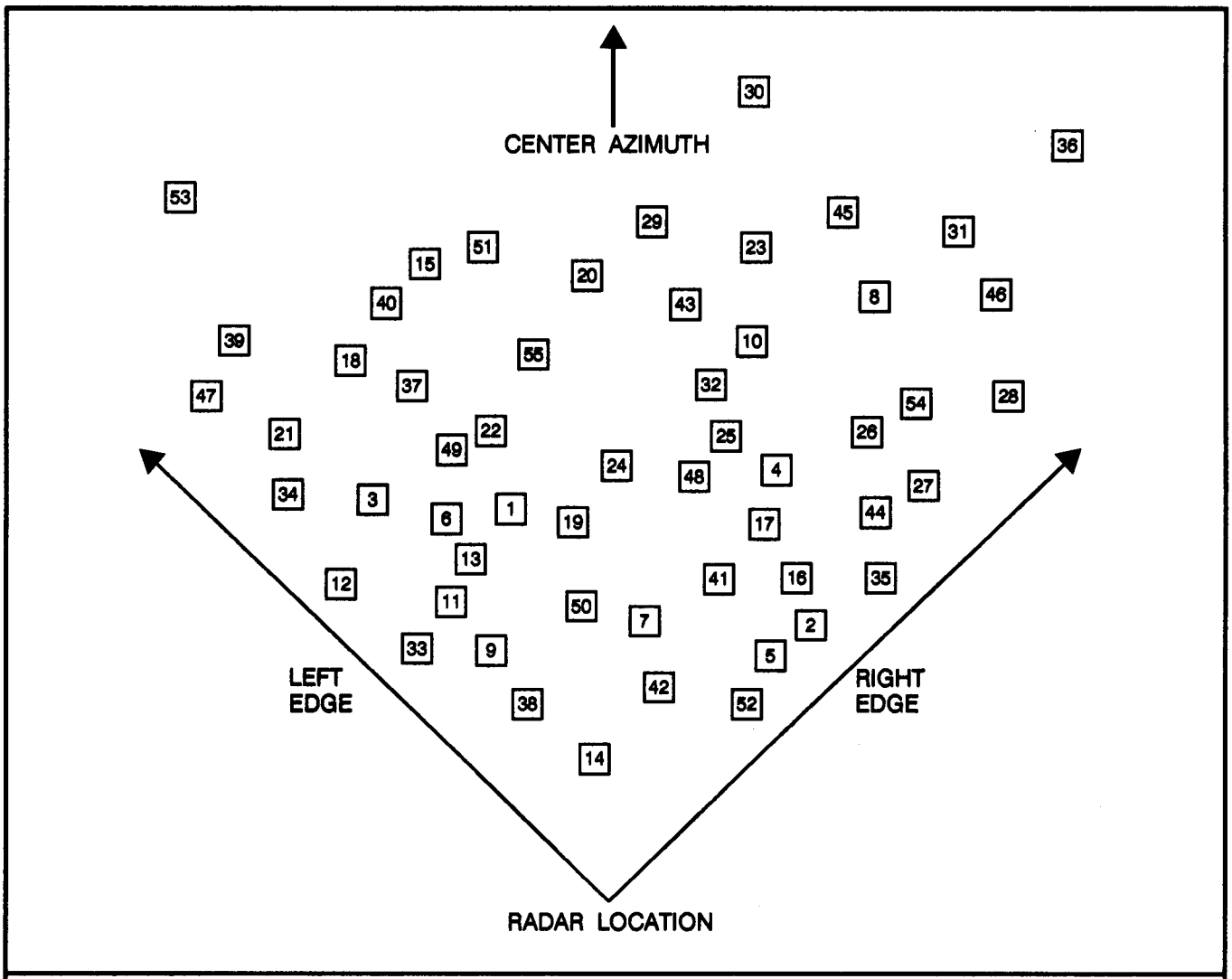

NOTE: This is a sample FEM overlay showing only a few of the targets, which are depicted as boxes. Search data and targets to be selected can be determined by rotating the overlay around the radar position. See appropriate radar operator manual for FEM target location selection and placement.

are to use to cue the radar section. When the cueing criteria are met during the exercise, the cueing agent sends the cue command to the radar.

Radar Section

After receiving the initial search data and commander's priority guidance, the section prepares the radar to support the mission. When notified by the command or control element, the radar operator turns on the appropriate FEM targets. The section then waits for the cue command from the cueing agent. When the section receives the cue command, the operator turns on the radar transmitter, processes the target, and sends it to TACFIRE.

Tactical Fire Direction System

TACFIRE will process the targets received according to the commander's criteria established in the system. The commander's criteria should conform to the exercise guidance issued by the command or control element. Normally, fire missions will be generated for priority targets. Intelligence targets developed will be sent to the TOC and/or the targeting element where they will be entered in TACFIRE. This information aids in determining the enemy artillery order of battle.

TOC and/or Targeting Element

The TOC and/or targeting element will then process the weapon locations and impact predictions.

Firing Unit

Upon receipt of fire missions, the firing unit generates firing commands (live or dry fire).

> **NOTE:** Use of the FEM program during live-fire exercises can generate fire missions in an impact area if the proper search and zone data are entered into the radar. Other targets will provide useful training for the TOC and targeting elements.

SCENARIO DEVELOPMENT

The steps for developing training by using the FEM program are described below.

Step 1

Determine training goals (mission requirements for the exercise). These should include -

- Mission-essential task list (METL) requirements.
- ARTEP mission training plan (AMTP) requirements.

Step 2

Analyze resources to include-

- Training areas available.
- Support available.
  - o TACFIRE (battalion or div arty).
  - o Aggressor.
  - o Pyrotechnics.
  - o FIST elements.
  - o Other.

Step 3

Develop an OPORD.

- Determine intelligence sources and estimates.
- Determine commander's targeting criteria.
- Determine commander's priority guidance for radar.
- Use the FEM overlay to determine the following data for the RDO:
  - o Radar location.
  - o Search data.
  - o Zone data.
  - o Reporting channels
  - o Cueing agents.
- On the basis of the scenario and OPORD, identify, potential FEM targets to be used.

Step 4

Develop a plan for updating and changing the tactical situation and mission. The plan should include–

- Tactical movements.
- Intelligence updates.
- Radar search and zone data.

- Nuclear, biological, chemical (NBC) situation.
- EW threat.
- FEM targets to be used.
- Cueing for radar.

Step 5

Develop a scenario to include –

- Movement times.
- Cueing agents.
- Times when changes will be made in-
  - o Search or zone data,
  - o Intelligence estimates.
  - o Tactical situation.
  - o EW threat.

IMPLEMENTING THE SCENARIO

The following are steps for implementing the scenario during the training.

During IPB, the battalion S2 (in conjunction with the div arty S2 and division G2, when available) determines likely enemy artillery and mortar locations. To do this, he uses aerial photos and standard military maps along with other intelligence information.

The command element then initiates the scenario and positions the radar according to the commander's guidance and mission requirements.

NOTE: Position the FEM overlay so that targets will be generated from logical tactical positions. Also, the radar position selected should be correct regarding site and screening crest to ensure that appropriate targets are produced.

Use the FEM overlay to determine targets and search data. These data include the following:

- Center of search sector for the radar.
- Left and right sector edges.
- Minimum and maximum search ranges.
- Zones to be used.
- Commander's priority (for CFFZs).
  - o Yes = On (target reports sent as Priority 1 message).
  - o No = Off (target reports sent as Priority 2 message).
- Electronic warfare information

The command element transmits the search data to the radar section. The section is told what FEM targets to turn on.

Cueing agents identified in the OPORD cue the radar when cueing guidance is met.

When cued, the radar section turns on the transmitter. The section then processes and transmits the targets to TACFIRE.

TACFIRE processes the information as if it were actual target locations. TACFIRE relays it to either the battalion TOC, the div arty TACFIRE, or other subscribers as directed by the tactical situation. The S3 and S2 take the target data provided and develop the data into the enemy order of battle. Any target sent in by the radar that meets the commander's attack criteria will produce a fire mission. The firing units can process these targets by generating fire commands for either live or dry fire.

APPENDIX D
VISIBILITY PROFILES

To effectively accomplish the mission of locating targets and reporting battlefield information, moving-target-locating radars must have electronic line of sight within the area of responsibility. A visibility profile pinpoints those areas that cannot be seen by the radar. This appendix will show how to construct visibility profiles and to develop an onionskin radar visibility diagram to be used as an overlay. It should be noted that the construction of a complete visibility profile is a time-consuming process. Therefore, visibility profiles should be constructed only as time and mission requirements permit.

CONSTRUCTING A VISIBILITY PROFILE

The study of landforms by a visual examination of the contour lines is adequate for many purposes. When the situation demands precision, it requires a profile. A profile is an exaggerated side view of a portion of the earth's surface along a line between two points. To plot the masked or hidden areas requires a series of profiles through the area of interest. The terrain and the assigned area of interest will determine the number of profiles required.

The general procedure is to construct profiles in series by starting at one (generally the left) edge of the assigned sector and placing one profile next to the other in a clockwise manner at least every 100 mils. Determine the forward and rear limits of the masked areas by drawing straight lines from the radar position to and past the highest points on the profile. Determine the masked areas by projecting or extending the visible points on the profiles to an overlay as shown in the figures on the following pages.

The specific procedural steps are described below.

Draw an azimuth line (to the nearest 100 mils on the map between the MTLR position and its range limit at the left edge of its assigned sector. (See the figure below.) This is the profile line.

Determine, by examination, the values of the highest and lowest contour lines that cross or touch the profile line. Add one contour interval value above the highest contour line and below the lowest contour line to account for hills and valleys.

PROFILE LINE CONSTRUCTED ON A CONTOUR MAP

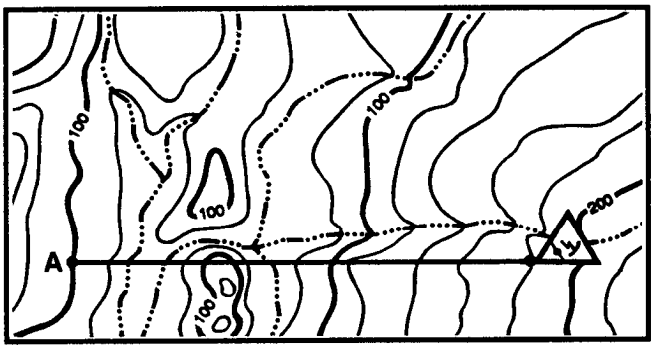

On a blank sheet of paper, draw equally spaced horizontal lines. Draw enough lines so there will be one line for each contour value determined in the preceding step.

Place the lined paper on the map with the top line adjacent and parallel to the profile line. On the lined paper, number the line closest to the profile line with the highest value determined above.

Number the rest of the lines in sequence down to the lowest value on the line farthest from the profile line.

CONTOUR INTERVAL VALUES

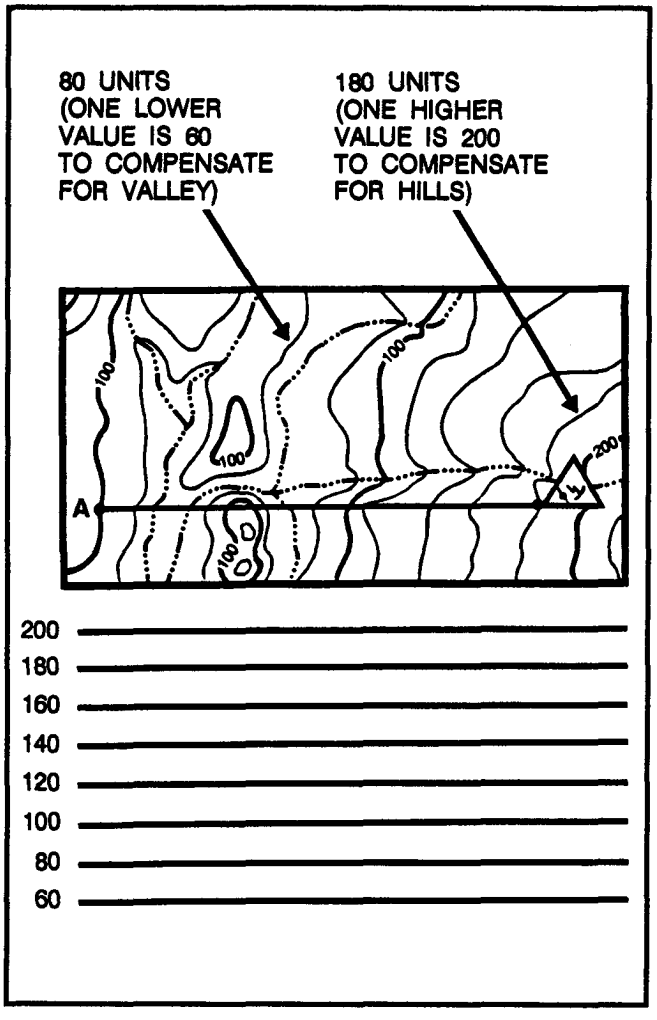

From each point crossed or touched by the profile line, draw a line perpendicular to the line with the same value. Place a tick mark where the perpendicular line crosses the line as shown below.

Determine the highest point of a hill and the lowest point of a valley by interpolation. Draw a perpendicular line to each interpolated value. This is shown in the figure on the next page.

After drawing all perpendicular lines, connect the tick marks with a smooth natural curve. This curve should follow the contour of the terrain as shown in the figure on the next page. Usually, hills and valleys are rounded and streams form a sharp V-shape.

PERPENDICULAR LINES DROPPED FROM CONTOUR LINES

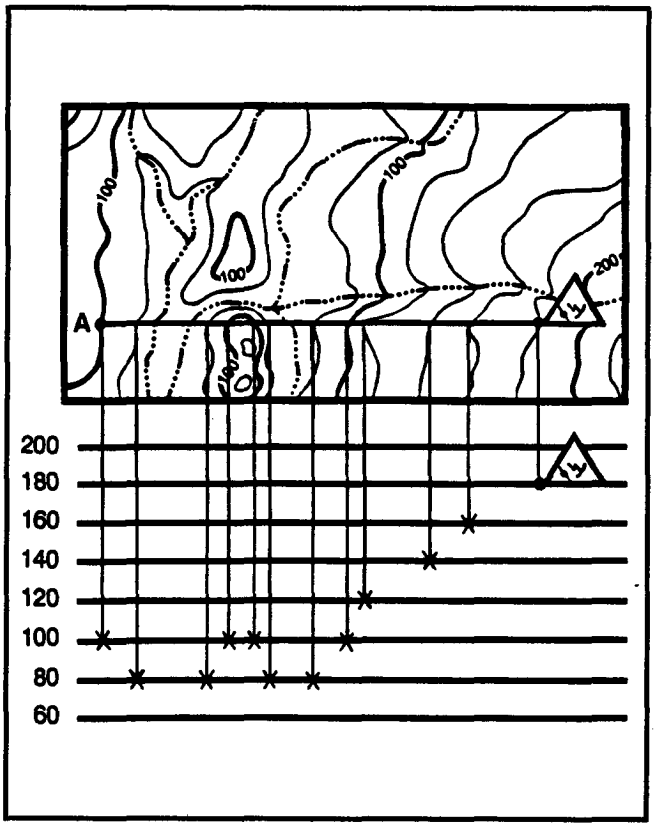

INTERPOLATION AND CONNECTING ENDPOINTS

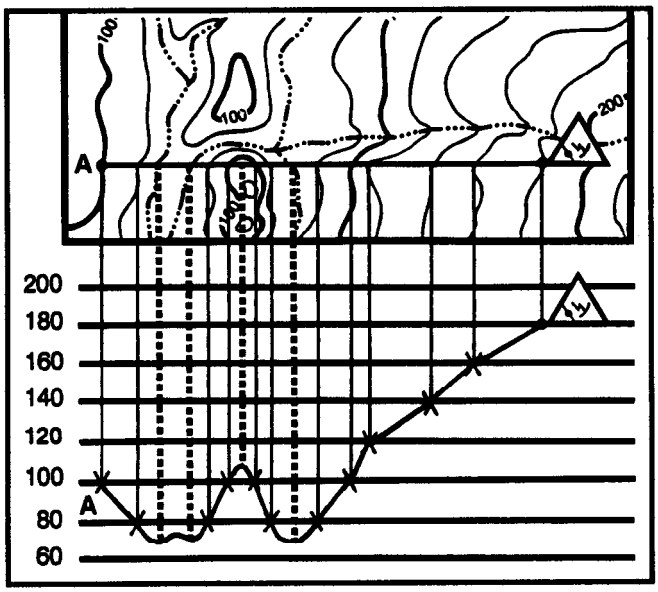

Next, draw straight lines from the radar to the lowest points-of visibility along the entire length of the terrain profile. Those areas not visible to the radar are below the lines and may be shaded as shown in the figure below.

Finally, transfer the shaded nonvisible area to the profile line. Do this by extending perpendicular lines from the left and right limits of the defilade areas as shown below. The defilade is shown as a heavy-lined portion of the profile line.

Construct the second profile in the same manner as the first. Move the straightedge clockwise from the first profile line and watch for major contour changes in the terrain. When a contour change that might block the visibility occurs or 100 mils from the first profile line, hold the straightedge in position and plot the points as previously explained. Continue the procedure, inspecting the complete area of interest. The number of profiles drawn to any one area will vary, depending on the terrain and the width of the area. As a minimum, however, profile lines will be drawn every 100 mils.

NOTE: An observed fire (OF) fan may provide a suitable 100-mil-graded template for constructing subsequent profile lines.

NONVISIBLE AREAS (DEFILADE)

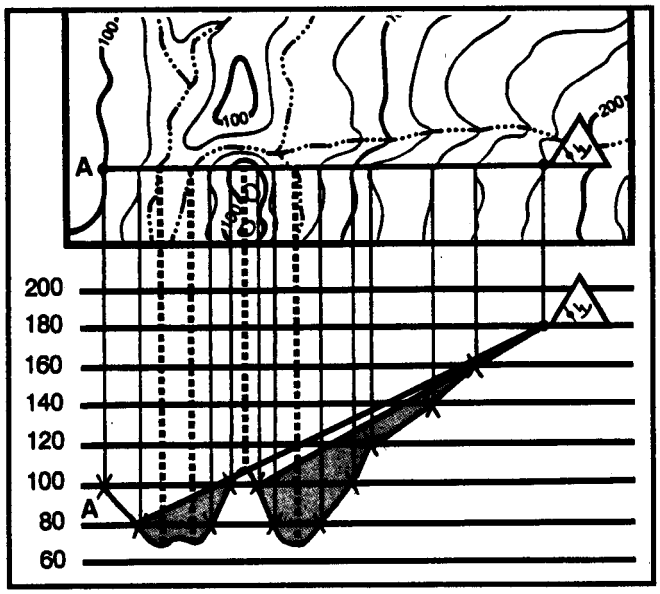

POINTS TRANSFERRED FROM PROFILE TO PROFILE LINE

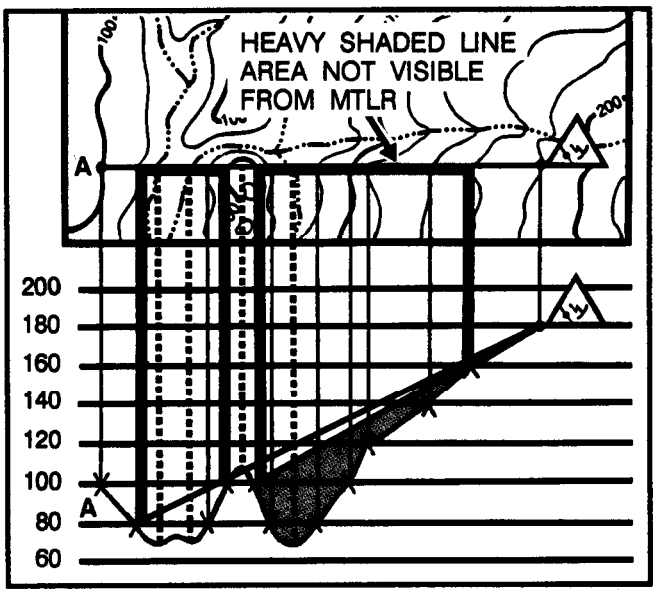

CONSTRUCTING THE RADAR VISIBILITY DIAGRAM (OVERLAY)

Transfer each visibility profile line in the zone of observation to the onionskin overlay as shown in the figure below.

PROFILE LINES IN THE ZONE OF OBSERVATION

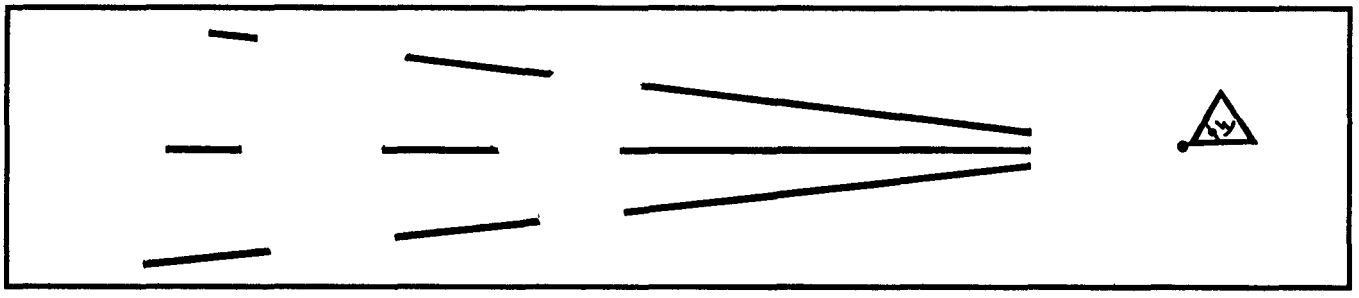

Connect all the nonvisible portions along each line of vision after they are identified and shaded.

POINTS TRANSFERRED FROM PROFILES TO STRAIGHT LINES

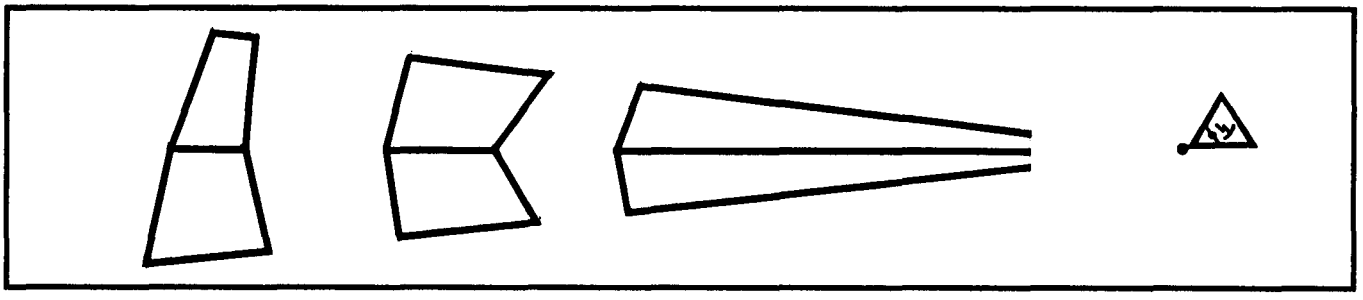

The finished product is as shown below. The plotter highlights nonvisible areas by shading or crosshatching the defilade areas.

AREAS OF VISIBILITY AND NONVISIBILITY

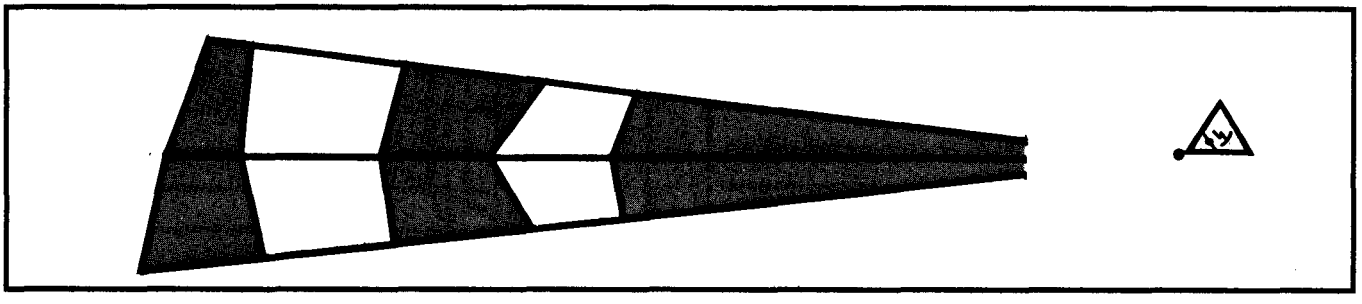

Label the 100-mil azimuth lines on the appropriate profiles, and determine marginal information from the OPORD and map sheet that will identify the radar visibility diagram. This overlay then becomes the radar visibility diagram. When the marginal information has been entered, the diagram will look like the example shown below. Since the radar visibility diagram is an operations document, it should be classified and/or safeguarded to prevent disclosure to the enemy. It is then ready to be submitted to division artillery.

CONSTRUCTING A HASTY VISIBILITY PROFILE

A hasty profile is constructed when speed is an important element or when a complete profile is unnecessary. The hasty profile shows only the hilltops, the ridgetops, and, if desired, the valleys. Construction is the same as for a detailed visibility profile.

SAMPLE RADAR VISIBILITY DIAGRAM

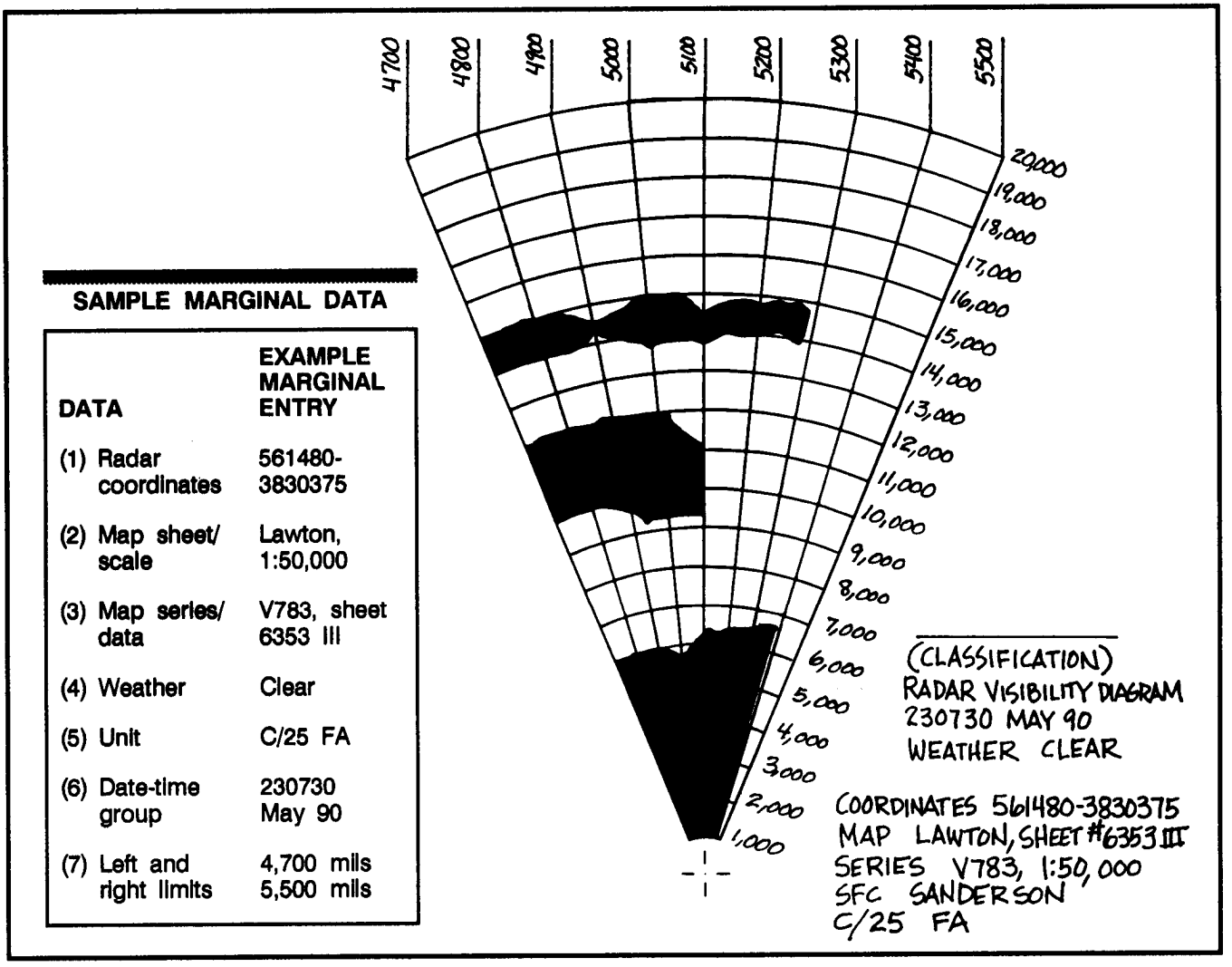

SAMPLE MARGINAL DATA

DATA	EXAMPLE MARGINAL ENTRY
(1) Radar coordinates	561480-3830375
(2) Map sheet/ scale	Lawton, 1:50,000
(3) Map series/ data	V783, sheet 6353 III
(4) Weather	Clear
(5) Unit	C/25 FA
(6) Date-time group	230730 May 90
(7) Left and right limits	4,700 mils 5,500 mils

APPENDIX E
COMMUNICATIONS

The TAB will be widely dispersed during combat. The communications lines for the elements of the TAB will also be dispersed across the division. As the communications lines become more complex, commanders must determine the most feasible method of communication. They must consider all methods to include messenger. The communications plan must support the deployment of TA assets within the division zone.

RESPONSIVENESS

Communications must be fast enough to ensure that target information flows from detection to attack before the targets can be repositioned. As the mobility of targets increases, the demand for responsiveness in TA communications also increases. While equipment or organization may impose physical limitations on the TA system, responsiveness is enhanced by operator performance. All personnel involved in target acquisition must understand the need for timeliness of information.

SECURITY

The enemy's ability to degrade our communications through such techniques as jamming, direction finding, and interception must be dealt with in planning and conducting communications operations. Contact the staff signal officer for information on the EW threat to communications and procedures to counter it. Additional information can be obtained from the IPB.

FIREFINDER RADAR SECTION COMMUNICATIONS

The Firefinder radar section sends enemy mortar, artillery, and rocket locations or friendly fire data to a supported FDC or to a TACFIRE, BCS, or FDS by wire and/or radio communications. Wire is preferred whenever possible. Use of wire minimizes the effects of massive jamming by the enemy during his artillery strikes. It also minimizes the possibility of enemy intercept and location of radar radio transmissions by use of direction finders.

Radio Communications

Each radar section operates in two tactical FM radio nets as directed by the controlling headquarters. Two AN/VRC-90 radios are in the radar section operations control group shelter for this purpose. These radios are equipped with KY-57 speech secure devices for secure voice transmissions.

The AN/TPQ-36 section normally operates in a battalion operations/fire (ops/F) net (VHF-FM) (D) and a command net (VHF-FM) (V). Usually, these two nets belong to the supported DS battalion.

The AN/TPQ-37 section normally operates on the TA/intel net (VHF-FM)(D) and a command net (VHF-FM)(V). The AN/TPQ-37 usually is under the control of the div arty or FA brigade TOC and passes target information directly to the counterfire officer at the controlling TOC. Also, the radar may be directed to pass targets to a DS or GS battalion.

In such cases, the supported unit S3 assigns a radio net and frequency.

Digital Communications

Digital communications addresses and authentication codes are prescribed in current cryptographic and authentication manuals. If digital communications are not available, the radar operator uses standard voice procedures to pass target information over the DS battalion operations/fire net or the force artillery command/fire net to the supported unit FDC.

Wire Communications

Wherever possible, wire lines are installed for voice and digital communications with the supported unit. Radios are then used as backup.

VOICE TRANSMISSION PROCEDURES

When digital communications are not possible, the radar section must report targets by voice. A target that would normally be sent digitally in FM;RFAF format will be sent as a call for fire. The radar section should initiate a fire-for-effect mission with the supported FDC. The call for fire contains six elements. These elements are listed below in the order in which they are used. For a detailed explanation of each element, see FM 6-30,

- Observer identification (or radar call sign).
- Warning order (for example, fire for effect).
- Target location (grid of target).
- Target description (for example, enemy artillery).
- Method of engagement.
- Method of fire and control.

Although direction is not one of the six elements of the call for fire, it is transmitted by the radar section as part of the initial call for fire.

Targets acquired that would normally be sent to the controlling headquarters digitally in ATI;CDR format will be sent by voice as a target report (SHELREP). The format for the target report is prescribed in STANAG 2008. The same report format (DA Form 2185-R) is used in case of enemy air attack (BOMREP), enemy mortar (MORTREP) or rocket fire (rocketing report [ROCKREP]), and location of an enemy target. (See Appendix B.)

DIGITAL MESSAGES

The Firefinder radar systems interface digitally with TACFIRE, BCS, and FDS. Firefinder is equipped with a DMD emulator to permit this digital interface. Computer data needed for interface are input during initialization and can be changed by use of function codes.

Digital communications can be transmitted either secure or nonsecure; that is, data may be sent and received in either coded or uncoded form. However, since the DMD emulator does not have a speech secure device, the operator must manually perform off-line encoding and decoding to transmit secure digital messages.

TACFIRE messages used by Firefinder (FF) radars are divided into two groups–receive messages and transmit (or send) messages. Firefinder can receive nine and send six different types of digital messages. Messages are displayed according to the priority level of the message. There are three priority levels for messages – 1 (highest), 2, and 3 (lowest). See the digital message format table for a display of which messages are received and/or transmitted from specific TACFIRE devices.

AUTHENTICATION METHODS

All messages sent and received by Firefinder in the digital mode should be authenticated. Three methods of authentication are available for Firefinder–algorithm (ALGOR), table, and manual.

DIGITAL MESSAGE FORMAT (TACFIRE VERSION 9)

PRIORITY	MESSAGE TITLE	FORMAT	FF	TACFIRE (BATTALION)	TACFIRE (DIV ARTY)[1]	MLRS	BCS
3	Priority or censor zone (CFZ, CFFZ, ATI)	SPRT;FILTER	R	T	T		
3	Radar search area	SPRT;SEARCH	R	T	T		
3	Met data	MET;TA	R	T	T		
3	Radar location	FM;OBCO	RT	RT	RT		RT
2	Friendly fire battery	FM;INTM	R	T			T
2	Friendly fire target	FM;MTO	R	T			T
2	Radar ready/ registration report	FM;SUBS	RT	RT			RT
1	Radar ready/fire mission	FM;FOCMD	RT	RT	RT	RT	RT
2[2]	Priority target report	FM;RFAF	T	R	R	R	R
3	Target report	ATI;CDR	T	R	R		
1	Plaintext message	SYS;PTM	RT[1]	RT	RT	RT	RT

LEGEND: R = receive T = transmit RT = receive and transmit

[1] Applies to FA brigade, division artillery, and corps artillery TACFIRE.
[2] Can be upgraded to Priority 1 based on priority zones and commander's criteria. See Chapter 4.

Algorithm Authentication

Algorithm authentication uses a code matrix to generate authentication codes for transmitted and received messages. The ALGOR matrix is entered by the operator and can be written onto a cassette tape by unit maintenance support. After ALGOR authentication has been selected and the matrix has been entered, no further operator action is needed. The computer automatically generates authentication codes for transmitted messages and checks authentication codes of received messages.

Table Authentication

Table authentication uses an operator-entered table to automatically supply authentication codes for transmitted messages. The code contains up to 100 two-character pairs that are entered. Table authentication may be selected for only one net member.

Manual Authentication

Manual authentication is the default method used when an incomplete ALGOR matrix has been entered or when all available table authentication codes have been used. When prompted, the operator enters authentication codes for each message.

DIGITAL NET COMMUNICATIONS

Firefinder Radars

The Firefinder radar can store net member data (member identifications and unit types) for up to ten receivers of six various types. These types of receivers include:

- TACFIRE.
- BCS.
- MLRS (FDS).
- Firefinder radars.
- Howitzer improvement program (HIP).
- Other types.

Firefinder radars can communicate digitally with any of the types of receivers listed above. However, only one net member at a time may be selected for communications.

Moving-Target-Locating Radars

Unless equipped with a digital message device, the AN/TPS-25A and AN/TPS-58B MTLRs cannot communicate directly with TACFIRE. When not equipped with a DMD, the MTLR must report targets by voice to the targeting element. The targeting element can use a VFMED to access TACFIRE target files or to initiate a fire mission.

The DMD is not equipped with a COMSEC device. To report critical information (such as radar site location) on the DMD, the operator should manually encode this information and send it as a plaintext (coded) message.

APPENDIX F

FIREFINDER MASK CONSIDERATIONS

This appendix explains how to calculate the track volume for the Firefinder radars. It is intended for use by the TA radar operators to enable them to determine whether the radar site will provide enough track volume to locate firing weapon positions. It also tells what actions they can take when they calculate insufficient track volume from the position.

DEFINITIONS

The following are definitions of terms associated with mask.

Flat mask is a single mask angle or a default value in the radar when no mask angle is entered into the radar computer. The flat mask default for the AN/TPQ-36 radar is 20 mils. The flat mask default for the AN/TPQ-37 radar is 8 mils.

Mask angle is the vertical angle from the radar to the top of the mask, or screening crest, at a given azimuth. For a given sector of search, the lowest mask angle and the highest mask angle are calculated and entered in the radar computer during its initialization procedures.

Mask variation is the difference between the lowest and highest mask angles.

Vertical scan is another system characteristic of the radar. It identifies the maximum vertical scanning capability of the specific type of radar. Vertical scan for the AN/TPQ-36 radar is approximately 80 mils with all scanning frequencies enabled. Each frequency that is disabled results in a loss of approximately 2.5 mils of vertical scan. (See TM 11-5840-354-10-1 for exact values for loss of vertical scan.) Vertical scan for the AN/TPQ-37 radar is approximately 104 mils. Since this radar uses phase or phase scan rather than the phase or frequency scan used by the Q-36, no vertical scan is lost when some of the frequencies of the Q-37 are disabled.

RADAR CHARACTERISTICS

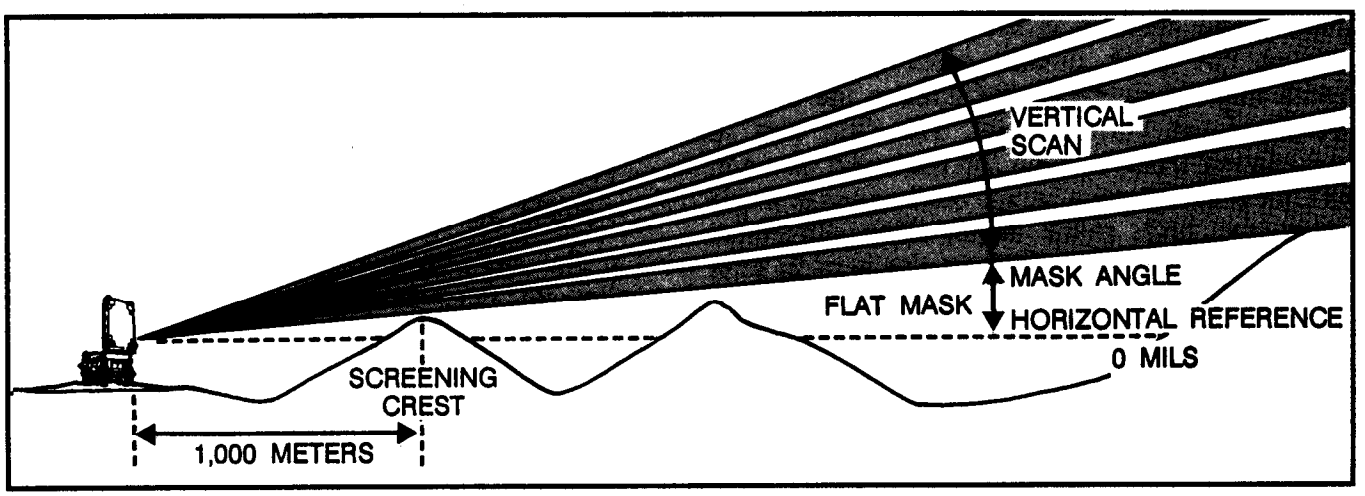

TRACK VOLUME

Track volume is determined by two factors – the vertical scan of the radar and the amount of vertical scan that is lost because of the terrain contour, or screening crest, in front of the radar, From any radar position, the altitude of the screening crest along the terrain contour in front of the position will vary in the radar sector of search. This varying screening crest altitude results in varying mask angles along the terrain contour. The variance between the smallest mask angle and the largest mask angle reduces the radar vertical scan.

Sometimes this reduction is enough that the available scan coverage is less than the 50-mil track volume required by the radar to extrapolate firing weapon locations. When the track volume is reduced below 50 mils, the radar operator must compensate either by artificially adjusting the low mask angle or by moving the radar to a new position from which adequate track volume is available.

Whenever possible, an aiming circle or other accurate measuring device should be used to determine mask angles along the terrain contour. The measured mask angles are entered in the computer to depict the terrain contour. Otherwise, the radar will radiate into hill masses that are higher than the flat mask default in the radar computer.

The Firefinder search fence starts at the lowest mask angle entered in the radar computer (or at the flat mask default value if no lowest mask angle is entered) and goes to the highest point of the vertical scan. The first step in calculating track volume for the radar site and search sector is to subtract the low mask angle from the high mask angle. This difference must then be subtracted from the vertical scan of the radar. The result is the track volume for the radar site.

Although the ideal mask variation (see Chapter 3) may be met, the maximum allowable mask variation for each radar can be calculated by subtracting the 50 mils of track volume required for firing weapon location from the vertical scan of the radar.

EXAMPLE

	Q-36	Q-37
Vertical scan	80 mils	104 mils
Track volume	-50 mils	-50 mils
Maximum allowable mask variation	30 mils	54 mils

Thus, it can be seen that any mask variation exceeding the allowable maximum (that is, 30 mils for the Q-36 and 54 mils for the Q-37) would not allow enough track volume for the radar to determine firing weapon locations. In that event, some action must be taken to regain enough track volume to perform the radar mission.

The radar uses the lowest and highest mask angles entered during initialization to establish mask variation internally. If the mask variation of the position exceeds the maximum allowable for the radar as discussed above, the lowest angle can be adjusted (raised) by the operator to reduce the actual mask variation to the maximum allowable for purposes of performing the radar mission. Of course, since the lowest mask angle determines the lowest part of the search fence, this adjustment will prevent the radar from tracking any rounds that are below the new lowest mask angle. If this is unacceptable, then the radar must be moved to a new position that has a lower mask.

TRACK VOLUME CALCULATION AND SUBSEQUENT ACTIONS

On the basis of the previous discussion, the following steps should be used to calculate available track volume from a given radar position. Included are further steps to be taken when the calculated track volume from the position is not enough for the radar to perform its mission.

- Step 1. Determine the lowest mask angle from the position. Use the formula from Chapter 4 (mask angle = change in elevation + range in thousands).
- Step 2. Determine the highest mask angle. Use the same formula used in Step 1.
- Step 3. Subtract the lowest mask angle determined in Step 1 from the highest mask angle determined in Step 2 to obtain mask variation.
- Step 4. Subtract the mask variation determined in Step 3 from the vertical scan for the type of radar involved to obtain total track volume available.
  - If total track volume available is greater than 50 mils, then the position is adequate for performing the mission.
  - If total track volume available is less than or equal to 50 mils, then proceed to Step 5.
- Step 5. Subtract the mask variation determined in Step 4 from 50 mils to determine how much the mask variation must be decreased to obtain 50 mils track volume.
- Step 6. To decrease the mask variation, add the value determined in Step 5 to the lowest mask angle and enter the sum in the radar computer as the revised lowest mask angle.

If the radar technician's evaluation of the Step 6 value is that the resulting adjustment of the vertical scan reduces the capability of the radar to perform its mission adequately, then he must coordinate movement of the radar to a new position and recalculate data.

The following example illustrates the calculation of track volume. A solution is provided for each type of Firefinder radar. Remember that mask variances greater than 30 mils for the AN/TPQ-36 radar and 54 mils for the AN/TPQ-37 radar may prevent the radar from obtaining the required track volume to provide firing weapon locations.

EXAMPLE

In this situation, you are the radar technician and observe the screening crest from your radar position as shown. All radar frequencies are enabled.

Your task is to compute track volume for the AN/TPQ-36 and AN/TPQ-37 radars and to take appropriate action when necessary.

SITUATION

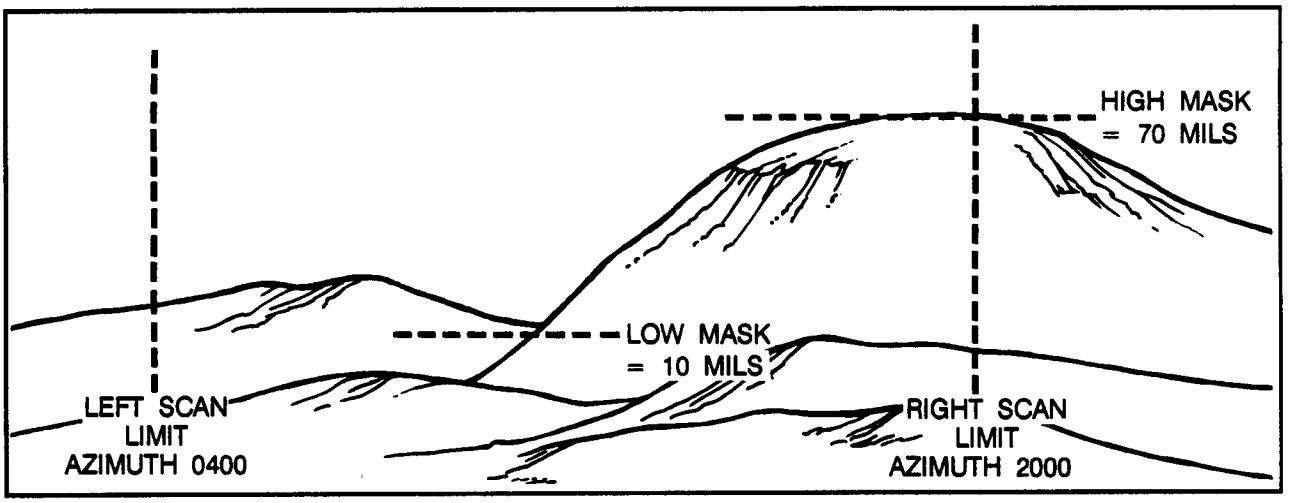

EXAMPLE (Continued)

The solution for the AN/TPQ-36 is shown below.

- Step 1. Lowest mask angle = 10 mils (given)
- Step 2. Highest mask angle = 70 mils (given)
- Step 3. Mask valance = 60 mils (70 mils minus 10 mils)
- Step 4. Track volume = 20 mils (60 mils vertical scan minus 60 mils mask variance) (Since track volume calculated Is less than 50 mils, proceed to Step 5.)
- Step 5. Adjustment to mask variance = 30 mils (50 mils track volume required minus 20 mils track volume calculated)
- Step 6. Adjusted lowest mask angle = 40 mils (l0 mils lowest mask angle plus 30 mils required adjustment)

Adjusting the lowest mask angle by 30 mils for this position would leave too much area in the sector of search that is not covered by vertical scan. Therefore, to effectively use the capabilities of the radar, you should select a new position rather than adjust the lowest mask angle.

AN/TPQ-36 SOLUTION

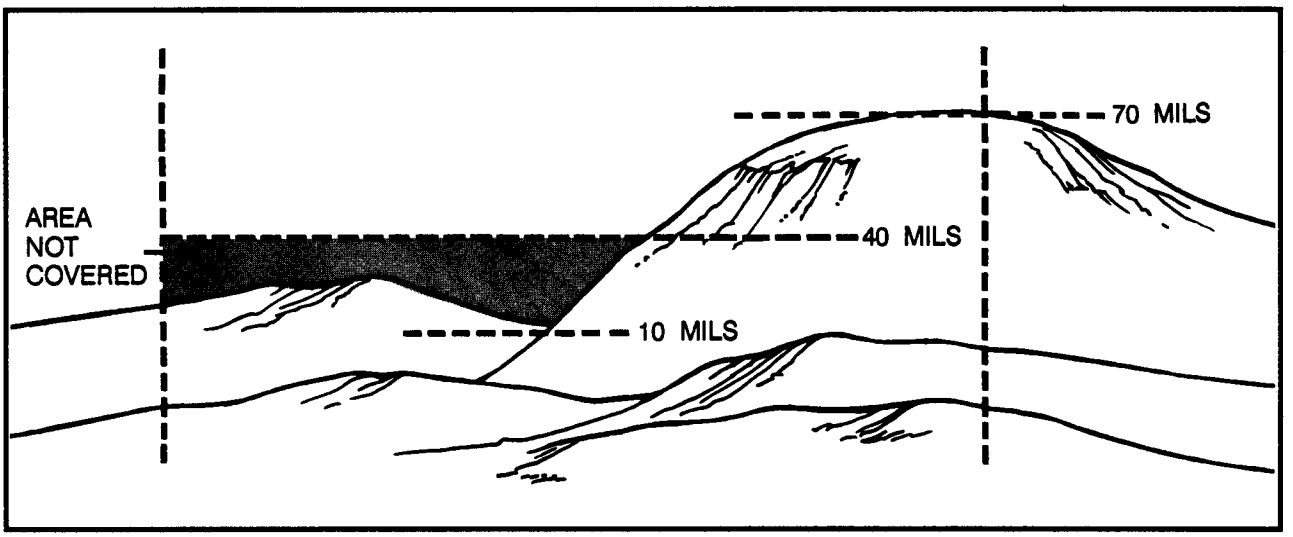

EXAMPLE (Continued)

The solution for the AN/TPQ-37 is shown below.

- Step 1. Lowest mask angle = 10 mils (given)
- Step 2. Highest mask angle = 70 mils (given)
- Step 3. Mask variance = 60 mils (70 mils minus 10 mils)
- Step 4. Track volume = 44 mils (104 mils vertical scan minus 60 mils track variance) (Since track volume calculated is less than 50 mils, proceed to Step 5.)
- Step 5. Adjustment to mask varlance = 6 mils (50 mils track volume required minus 44 mils track volume calculated)
- Step 6. Adjusted lowest mask angle plus 6 mils required adjustment)

Adjusting the lowest mask angle by 6 mils in this position would not greatly affect the capability of the radar to perform its mission. Therefore, enter the lowest mask angle of 16 mils and the highest mask angle of 70 mils Into the radar computer.

AN/TPQ-37 SOLUTION

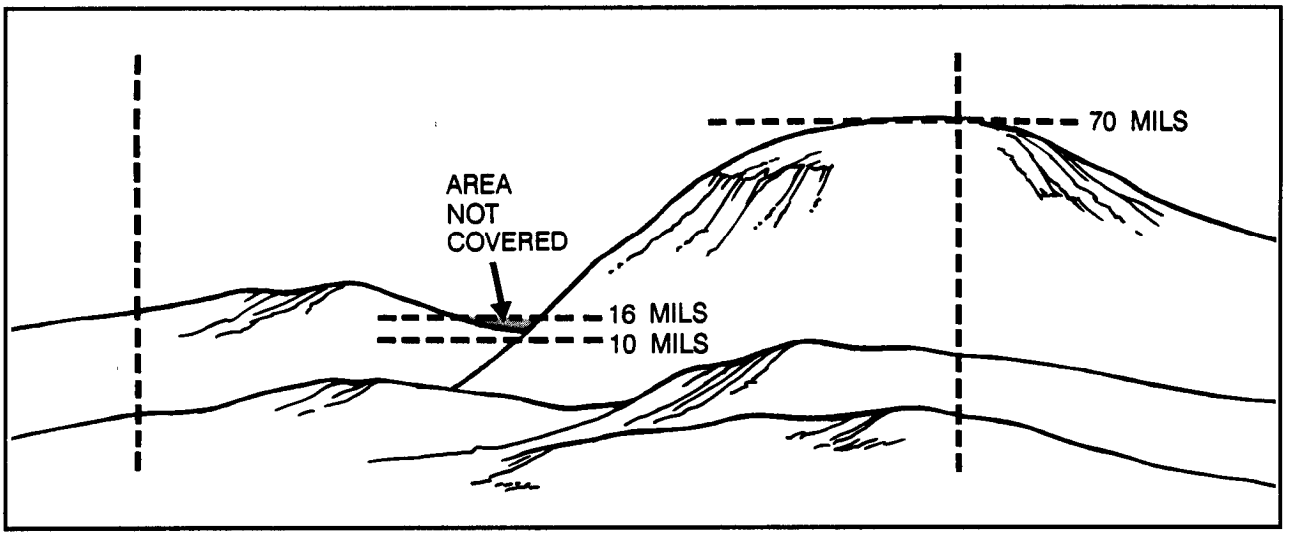

APPENDIX G

TARGET ACQUISITION TAB TO THE FIELD ARTILLERY SUPPORT APPENDIX AND THE RADAR DEPLOYMENT ORDER

The purpose of the TA tab to the FA support appendix is to assign missions, consolidate field artillery TA assets, establish target processing flow, and assign and coordinate responsibilities not covered in unit SOPs. This appendix explains the preparation of the TA tab and its enclosures (the radar deployment orders).

Section I. TARGET ACQUISITION TAB

DESCRIPTION

The TA tab is a managerial tool used, when time permits, primarily by the div arty (or FA brigade) and DS battalion staffs. It is used to ensure that all TA assets are employed to support the overall maneuver operation. Although no specific format for the tab is prescribed, the five-paragraph operation order format is used when the TA tab is issued separately from the FA support plan. (See the sample tab on page G-8.) The TA tab is an integral part of the field artillery support plan, which is an appendix to the fire support annex of the operation order. This hierarchy is shown below:

- Operation Order _____(52d Mech Inf Div).
- Annex _____(Fire Support).
- Appendix _____ (Field Artillery Support Plan).
- Tab _____(Target Acquisition).

PREPARATION

In the div arty headquarters, the div arty S2 is responsible for the preparation of the TA tab. He is assisted by the div arty counterfire officer, the TAB commander, and the assistant counterfire officer (the TAB executive officer). In the FA brigade, the TA tab also is developed by the S2. In separate maneuver brigades, the TA tab is produced jointly by the FA battalion S2 and S3 with assistance from the TA platoon leader. The TA tab usually consists of the heading, five major paragraphs, and the enclosures.

TARGET ACQUISITION TAB HEADING

The tab heading includes the security classification, the title line, the references, and the time zone used throughout. The classification is shown at the top and bottom of each page of the document.

EXAMPLE

_____
(Classification)

TAB A (TARGET ACQUISITION) TO APPENDIX____ (FA SUPPORT PLAN) TO ANNEX____(FIRE SUPPORT) TO OPORD_____.

EXAMPLE (Continued)

Reference: Map, series (number and geographic area, if necessary), sheet number(s) (and name, if necessary), edition___ , scale_____ .

Time Zone Used Throughout:_____.

MAJOR PARAGRAPHS

Situation (Paragraph 1)

This paragraph should include the friendly situation, supported units, and other TA assets in sector. Include specific enemy and friendly assessments that form a basis for threat assessments required on the radar deployment order.

Mission (Paragraph 2)

This paragraph should be a clear, concise statement of the target acquisition mission.

Execution (Paragraph 3)

The execution paragraph contains the subparagraphs described below.

Concept of the Operation. This subparagraph (3a) gives the commander's concept for target acquisition. This should include identification of designated cueing agents and general cueing guidance. Specific cueing guidance is listed below in the coordination subparagraph (3e).

Processing. The processing subparagraph (3b) is used to denote target processing flow. This targeting information flow describes the relationship between the target acquirer and the headquarters controlling the radar. This paragraph does not represent the actual communications nets used but shows the destination flow of targeting information. This paragraph should list all field artillery TA assets and headquarters controlling them. The following are examples of the types of information that may be included in the processing subparagraph:

- AN/TPS-25A(58B) section reports targets to the div arty TOC.
- AN/TPQ-36 section reports targets to the controlling DS battalion FDC.
- AN/TPQ-37 section reports targets to the div arty (or FA brigade) TOC.
- Aerial fire support observer reports targets to the controlling headquarters TOC.
- DS battalions report targeting data to the div arty TOC.
- Div arty TOC will exchange targeting information with the supporting FA brigade TOC (especially when it acts as the alternate div arty TOC).

The target processing flow is based on the tactical situation and command and control relationships. There are many options available for structuring the MTLR target flow. One option is that the MTLR sends targeting information to the brigade FSE. Information is then forwarded through FA communications channels to the div arty TOC. Another option is that the MTLR sends targeting information to the DS battalion FDC. The DS battalion then relays the information to both the div arty TOC and the maneuver brigade FSE.

Visual Observation. This subparagraph (3c) includes ground and air observation. Ground observation is covered in Enclosure 1 to the TA tab, which is the consolidated visibility diagram. This diagram covers the entire division sector to include forward observers and the MTLR. Time is the critical factor in assembling this enclosure.

Air observation addresses the missions and command and control relationships assigned to the AFSOs. Types of C2 relationships assigned to the AFSOs are operational control, direct support, or general support. At each level of command, assets from the field artillery and the aviation brigade combine to form the OH-58D system. At corps level, 15 AFSOs are assigned to corps artillery HHB, and 15 aircraft and pilots are assigned to the target acquisition and

reconnaissance company, command aviation battalion, corps aviation brigade. In the heavy division, six AFSOs are assigned to div arty HHB, and six aircraft and pilots are assigned to the div arty support platoon of the command aviation company, corps aviation brigade. The overall mission of the OH-58D is normally assigned by the FSE to execute the commander's intent, However, mission briefings to, and actual flight control of, the OH-58D crew are often better accomplished by the force artillery TOC because of the availability there of technical information required by the crew. Examples of employment options are shown in the table below.

EXAMPLES OF EXPLOYMENT OPTIONS

EMPLOYMENT OPTION	MISSION	TASKS	CONTROLLED BY	FIRE SUPPORT FROM
Maneuver brigade control: OPCON or DS to DS FA battalion	Observer	Target acquisition and engagement	Maneuver brigade through brigade fire support cell	DS battalion
Covering force HQ control: OPCON or DS to covering force artillery HQ	Observer	Target acquisition and engagement	Covering force artillery HQ	DS battalion
Attack helicopter battalion (AHB) control: OPCON or DS to AHB	Observer and/or fire support coordination	Target acquisition and engagement and/or fire support planning	Attack helicopter battalion TOC	AHB initially; GS artillery secondarily
Cavalry (cav) squadron (sqdn) control: OPCON or DS to the cav sqdn	Observer and/or fire support coordination	Target acquisition and engagement and/or fire support planning	Cav sqdn through sqdn FSO	Air cav troop initially; GS artillery secondarily
Division control: GS	Observer	Target acquisition and engagement	Division through div arty TOC	Div arty or quick fire channel to GS unit
Division control: GS	Observer	Target acquisition and engagement	Division rear CP through its FSO (nonstandard mission)	Unit providing support to rear CP
Corps control: GS	Observer	Target acquisition and engagement	Corps through the corps arty TOC	Corps FA battalions and brigades or tasked div arty units

NOTE: Detailed information on employment considerations can be found in FM 6-20-40 and FM 6-20-2.

Radar. This subparagraph (3d) deals with the missions and command and control relationships assigned to the FA radars. FA radars may be attached to FA battalions or higher FA headquarters. They help perform the mission of the FA unit. Although not given the standard mission assigned to FA units, an attached radar assumes the mission of the supported unit; for example, DS or GS.

An example mission for an AN/TPQ-36 section might be as follows:

AN/TPQ-36, Section 3, Btry A, 25 FA; Mission Attached to 1-51 FA (DS). (See RDO, Enclosure 5.)

Coordination. The coordination subparagraph (3e) covers information that is not addressed in the unit tactical standing operating procedure (TSOP). As a minimum, the paragraph should contain the following:

- The requirement for the supported DS battalion to report its radar locations and sectors of search to the div arty targeting element.
- Cueing guidance established by the div arty counterfire officer.
- Common sensor boundary. Firefinder radars sharing or having overlapping search sectors need to be identified. Consideration must then be given to the establishment of a CSB. The CSB is indicated by a series of grid coordinates to define its location.
- Coordination for communications nets and relays, if required.
- Additional coordination for survey and security, if required.

Service Support (Paragraph 4)

This paragraph lists additional service support requirements as required. It may refer to the service support annex.

Command and Signal (Paragraph 5)

The fifth paragraph lists required information as necessary. It may refer to the fire support annex.

Enclosures

Enclosures to the TA tab should include the following:

- Enclosure 1 is a consolidated visibility diagram.
- Enclosure 2 is a consolidated capabilities overlay. It normally contains the following
  - o Major unit boundaries, FEBA, and FLOT.
  - o Major search sectors to include primary and alternate sectors, zones with type and number, and radar type and section description. Primary zones are depicted by solid lines; alternate zones, by dotted lines. Section SOPs should specify color coding for individual radar data.
  - o Common sensor boundary, drawn as a solid line labeled with CSB and the effective DTG.
  - o Major unit locations, especially those covered by the CFZ.
  - o Overlay title, classification, and register marks.
- Enclosure 3 is the AN/TPS-25A or AN/TPS-58B RDO.
- Enclosures 4 through 6 are the AN/TPQ-36 RDOs.
- Enclosures 7 and 8 are the AN/TPQ-37 RDOs.

NOTE: It may not always be possible to include all RDOs as enclosures. This is especially true for radars attached to subordinate FA battalions.

Section II. RADAR DEPLOYMENT ORDER

DESCRIPTION

The RDO (DAForm 5957-R) is an enclosure to the TA tab. DA Form 5957-R replaces DA Form 5364-R (Commander'sTarget Criteria Message). The RDO designates the information required by each radar technician to deploy his radar section and begin operations.

RESPONSIBILITIES

Direct Support Battalion S2

The DS battalion S2 is the TA manager for assets attached to the battalion. He is responsible for developing and issuing the RDO to the TA technician (MOS 131A). When developing an RDO, the S2 must coordinate with the maneuver brigade targeting officer (brigade FSE) to integrate TA assets into the overall maneuver scheme.

Division Artillery Counterfire Officer

The counterfire officer is the TA manager for the division artillery. He is responsible for developing and issuing RDOs to radar sections that are controlled by division artillery.

FA Brigade Counterfire Officer

The brigade CFO has the same responsibilities as the div arty CFO for TA assets under control of the FA brigade.

HOW TO COMPLETE DA FORM 5957-R

The instructions for completing DA Form 5957-R are explained below.

Heading

In the first block list the radar section number, and circle the type of radar involved.

In the second block, enter the mission (GS or attached). If the section is attached, list the unit to which it is attached; for example, 3/A/25 FA attached to 1-51 FA. Limited attachments are not listed on the RDO; for example, when the section is attached for administrative and logistic support only.

Under LOCATION, enter a primary and an alternate general position area for the section. The radar technician will select the actual site and report its location.

Search Sector

In this section, describe the search sector. For an MTLR, select primary and secondary azimuths and indicate the sector edges in roils for each. For a WLR select a primary azimuth only. Then determine the left and right sector edges. These edges are normally approximately 800 mils left and right of the primary azimuth. Range search limits can be specified, but are normally expressed as the maximum system capability. (See Chapter 4.)

EW Threat Assessment

In this section indicate the EW threat assessment. Specify whether an EW threat exists, if it is affecting friendly assets, and the type of threat (air or ground). Use the Firefinder survivability flowchart in Chapter 3 to determine emission limits.

Cueing Agents

In this section list, in priority by call sign, agents that can cue the radar. For a Q-36 that is attached, cueing agents may be a CP, a brigade FSE, a battalion FSO, a company FIST, a COLT, a reinforcing battalion TOC (if applicable), or AFSO sections. Cueing agents for an MTLR in general support might be the div arty TOC, division G2, alternate div arty TOC (FA brigade TOC), or AFSO sections.

Reporting Channels

In this section list the communications nets on which the radar is to operate. Include the call sign for each.

This section implements STANAG 2029, Edition 6, and QSTAG 514, Edition 1.

Zone Data

In this section include zone data. List the type of zone and zone number (for example CFZ1), and corner coordinates of the zones. In the description column, list the description of the activity (if any) in the zone. Also list the command priority for CFFZs when upgraded from 2. (See sample RDO below.)

SAMPLE RADAR DEPLOYMENT ORDER

UNCLASSIFIED
(CLASSIFICATION WHEN FILLED IN)

RADAR DEPLOYMENT ORDER
For use of this form, see FM 6-121. The proponent agency is TRADOC.

SECTION 2/F/25	-25A / -58B / (36) / -37	MISSION ATTACHED 1-30 FA	
LOCATION	Primary NB 230200	Alternate	

SEARCH SECTOR

	Left Edge	Right Edge	Minimum Range	Maximum Range
Primary Azimuth 1100	-800 mils	+800 mils	750 meters	24,000 meters
Alternate Azimuth	mils	mils	meters	meters

EW THREAT ASSESSMENT

EW Threat (Yes) or No)	Affecting Friendly Assets (Yes) or No)	Type of Threat (Air or (Ground)

NOTE: Use the Firefinder survivability flowchart in FM 6-121 to determine emission limits.

CUEING AGENTS (CALL SIGN AND DESIGNATION) IN PRIORITY

A4Q02	S2, 1-30 FA	B2N44	FIST A/1-4 HAR	C2022	FSO, 1 BDE
N2N08	AFSO, SEC 1	N2N09	AFSO, SEC 2	D6C01	9TH DIV ARTY TOC

REPORTING CHANNELS

FD1 (1-30 FA)	A4Q01	1-30 FA CMD NET	A4Q06

ZONE DATA

Type and Number	Description and /or Command Priority	Grid Coordinates of Zone Corner Points					
CFFZ-1	RAG PRI 1	NB 290245	NB 300250	NB 320250	NB 330245	NB 320240	NB 300240
CFFZ-2	DAG PRI 2	NB 370270	NB 430250	NB 390220			
CFFZ-3	SUSP ARTY PRI 2	NB 300220	NB 320220	NB 320190	NB 300190		
CFZ-1	2/F/25	NB 228202	NB 232202	NB 232198	NB 228198		
CFZ-2	1-30 FA TOC	NB 205233	NB 210235	NB 220235	NB 225233	NB 220230	NB 210230
CFZ-3	3-30 FA TOC	NB 240350	NB 250360	NB 260350	NB 250345		
CFZ-4	1 BDE TOC	NB 160215	NB 170220	NB 180220	NB 180210	NB 175205	NB 170205
CFZ-5	1/F/25	NB 268182	NB 272182	NB 272178	NB 268178		
ATIZ-1	SUSP ARTY	NB 400190	NB 430210	NB 450210	NB 450170	NB 430170	

DA FORM 5957-R, SEP 1990

UNCLASSIFIED
(CLASSIFICATION WHEN FILLED IN)

EXAMPLE OF ZONE REJECTION

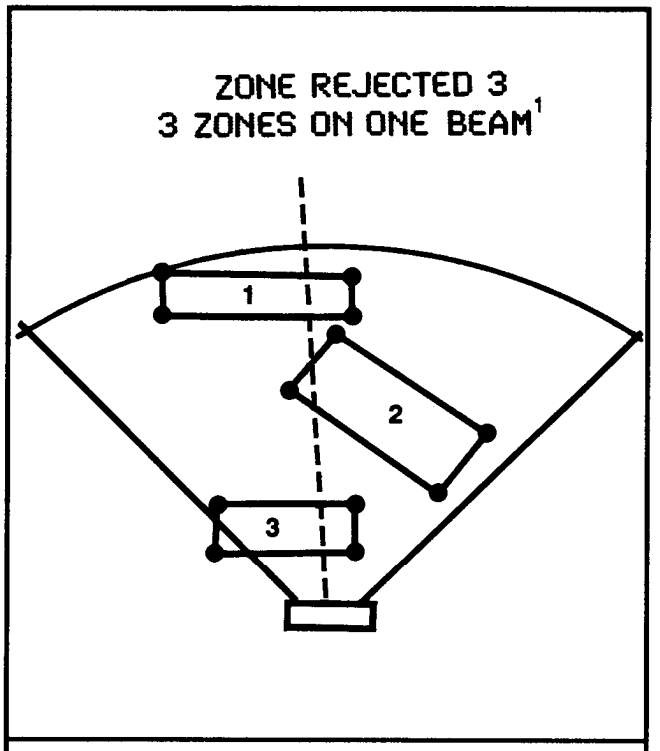

[1]The computer will show this error message in this situation.

The following are some rules for developing zone data:

- Up to nine zones can be entered in the radar. All zones may be of one type or any combination of types.
- A zone may be defined by a minimum of three and a maximum of six coordinates.
- A radar zone cannot intersect or touch another zone.
- No more than two zones can be along the same search azimuth, except a CFZ around the radar itself as shown in the figure at the left.
- Grid coordinates must be listed and entered sequentially. (Coordinates should be entered clockwise.)
- Zone coordinates cannot fall outside the sector of search (except for CFZs).
- An azimuth should not intersect the boundary of a zone more than two times as shown in the figure below.

EXAMPLE OF AZIMUTH REJECTION

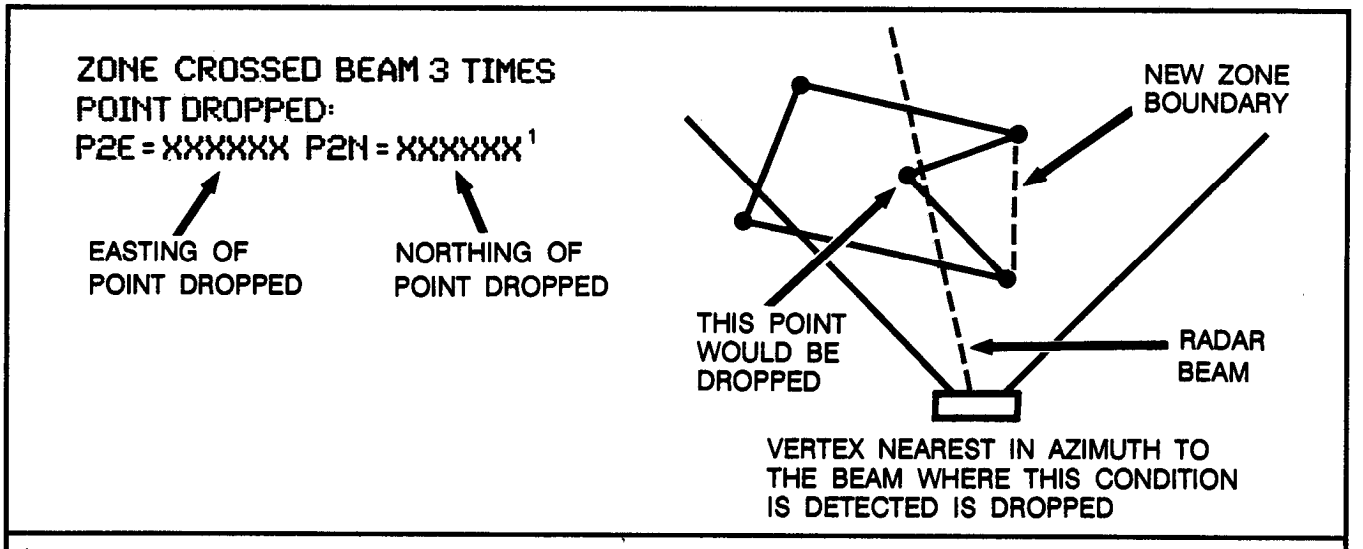

[1]The computer will show this error message in this situation.

SAMPLE TA TAB TO FA SUPPORT PLAN

(Classification)

TAB A (TARGET ACQUISITION) TO APPENDIX 3 (FA SUPPORT PLAN) TO ANNEX C (FIRE SUPPORT) TO OPERATION ORDER 1 (GOLD DRAGON), 52d Mech Div.

References: Map, series M745, DEUTSCHLAND, sheet L5118 (Marburg)
Edition: Ausgabe 4 DMG
Scale: 1:50,000.

Map, series M745, DEUTSCHLAND, sheet L5120 (Ziegenheim)
Edition: Ausgabe 4 DMG
Scale: 1:50,000.

Map, series M745, DEUTSCHLAND, sheet L5318 (Amoneburg)
Edition: Ausgabe 4 DMG
Scale: 1:50,000.

Map, series M745, DEUTSCHLAND, sheet L5320 (Alsfeld)
Edition: Ausgabe 4 DMG
Scale: 1:50,000.

Time Zone Used Throughout: ZULU

1. SITUATION

The enemy offensive has been halted, resulting in the current dispositions. Intelligence reports indicate the enemy is regrouping and is capable of launching a new offensive within 48 hours.

2. MISSION

On order, the 52d Mech Div will conduct offensive operations to defeat the enemy and prevent his massing for a new offensive. On order, the 52d Mech Div will exploit any advantages gained and push the enemy back to the international border.

(Classification)

SAMPLE TA TAB TO FA SUPPORT PLAN (Continued)

(Classification)

TAB A (TARGET ACQUISITION) TO APP 3 (FA SUPPORT PLAN) TO ANX C (FIRE SUPPORT) TO OPORD 1 (GOLD DRAGON), 52d Mech Div.

3. EXECUTION

a. Concept of Operation. 52d Mech Div target acquisition assets will deploy well forward in sector to locate high-payoff targets and protect friendly forces, with long-range TA assets acquiring targets at maximum range to support the offensive operation to reestablish the international border. Priority of TA effort to 1st Bde then 2d Bde. AN/TPS-25 priority to monitor AA1.

b. Processing. General support radars and AFSOs will send their targeting information directly to the div arty TOC. Radars attached to direct support FA battalions will report information to their respective battalions. Targeting information developed at DS battalion level will be sent to div arty. AFSOs with an OPCON mission will send their targeting information to their controlling FA unit.

c. Visual Observation.

(1) Ground Observation. See visibility diagram at Enclosure 1.

(2) Air Observation.

(a) Sections 1 and 2 OPCON to 1-90 FA (155, SP).

(b) Sections 3-6, GS, allocated on a mission-by-mission basis with priority to maintain on-call 24-hour surveillance of division right flank.

d. Radar. See capabilities overlay at Enclosure 2.

(1) AN/TPS-25, Sec 1, Btry A (TA), 30th FA
Mission: GS 52d Div Arty, TA priority is AA1
Secondary TA priority is AA2
See RDO, Encl 3.

(Classification)

SAMPLE TA TAB TO FA SUPPORT PLAN (Continued)

(Classification)

TAB A (TARGET ACQUISITION) TO APP 3 (FA SUPPORT PLAN) TO ANX C (FIRE SUPPORT) TO OPORD 1 (GOLD DRAGON), 52d Mech Div.

(2) AN/TPQ-36, Sec 2, Btry A (TA), 30th FA
Mission: Attached 1-90 FA (155, SP)

(3) AN/TPQ-36, Sec 3, Btry A (TA), 30th FA
Mission: Attached 2-90 FA (155, SP)

(4) AN/TPQ-36, Sec 4, Btry A (TA), 30th FA
Mission: Attached 3-90 FA (155, SP)

(5) AN/TPQ-37, Sec 5, Btry A (TA), 30th FA
Mission: GS 52d Div Arty (155, SP)
See RDO, Encl 4

(6) AN/TPQ-37, Sec 6, Btry A (TA), 30th FA
Mission: GS 52d Div Arty
See RDO, Encl 5 (omitted)

e. Coordination.

(1) Survey. Radar Sections 2 through 4 will receive survey support from their respective DS battalions. Cdr, Btry A (TA), 30th FA will provide survey support for Radar Sections 1, 5, and 6.

(2) Common Sensor Boundaries. Effective 010001Z a common sensor boundary will be established along PL DOG. Once 1st Bde has completed fording operations vic NB191353 and secured Objective BONE, a new common sensor boundary will be established along PL CAT.

(3) Reports. DS battalions will report radar locations and sectors of search to div arty for any radars attached.

(Classification)

SAMPLE TA TAB TO FA SUPPORT PLAN (Continued)

(Classification)

TAB A (TARGET ACQUISITION) TO APP 3 (FA SUPPORT PLAN) TO ANX C (FIRE SUPPORT) TO OPORD 1 (GOLD DRAGON), 52d Mech Div.

(4) Met. Q-36 coordinates for met data from DS battalion TOC; Q-37 receives data from div arty CP.

(5) Cueing. Maximum radiation time is based on the survivability flowchart. Designated cueing agents for Q-36 are DS battalion S2, battalion FSO, and brigade FSO. Q-37 cueing agents will be the div arty CFO and reinforcing FA brigade S2.

(6) Firefinder Zones. Div arty commander's guidance states all maneuver objectives will be covered by CFFZs within the radar boundaries. DS battalion S2s will ensure that suspected artillery positions are covered by CFFZs. Q-36 and Q-37 sections will input CFZs on themselves and FA battalion HQ within their brigade boundaries. 2d Bde Q-36 ensure that a CFFZ is input for the town of STRANG vic NB1045. No CFFZs are to be placed outside boundaries.

4. SERVICE SUPPORT

Radar Sections 1 through 3 will receive logistical support from their respective DS battalions. Cdr, 2-19 FA (203, SP) will provide logistical support for Radar Sections 5 and 6. Cdr, div arty HHB will provide logistical support for Radar Section 1.

5. COMMAND AND SIGNAL

Current SOI in effect.

Encl 1: Visibility Diagram.
Encl 2: Capabilities Overlay.
Encl 3: RDO, Radar Section 1 (AN/TPS-25).
Encl 4: RDO, Radar Section 5 (AN/TPQ-37).
Encl 5: RDO, Radar Section 6 (AN/TPQ-37) (omitted).

(Classification)

SAMPLE TA TAB TO FA SUPPORT PLAN (Continued)

(Classification)

ENCLOSURE 1 (VISIBILITY DIAGRAM) TO TAB A (TARGET ACQUISITION) TO APPENDIX 3 (FA SUPPORT PLAN) TO ANNEX C (FIRE SUPPORT) TO OPERATION ORDER 1 (GOLD DRAGON), 52d Mech Div.

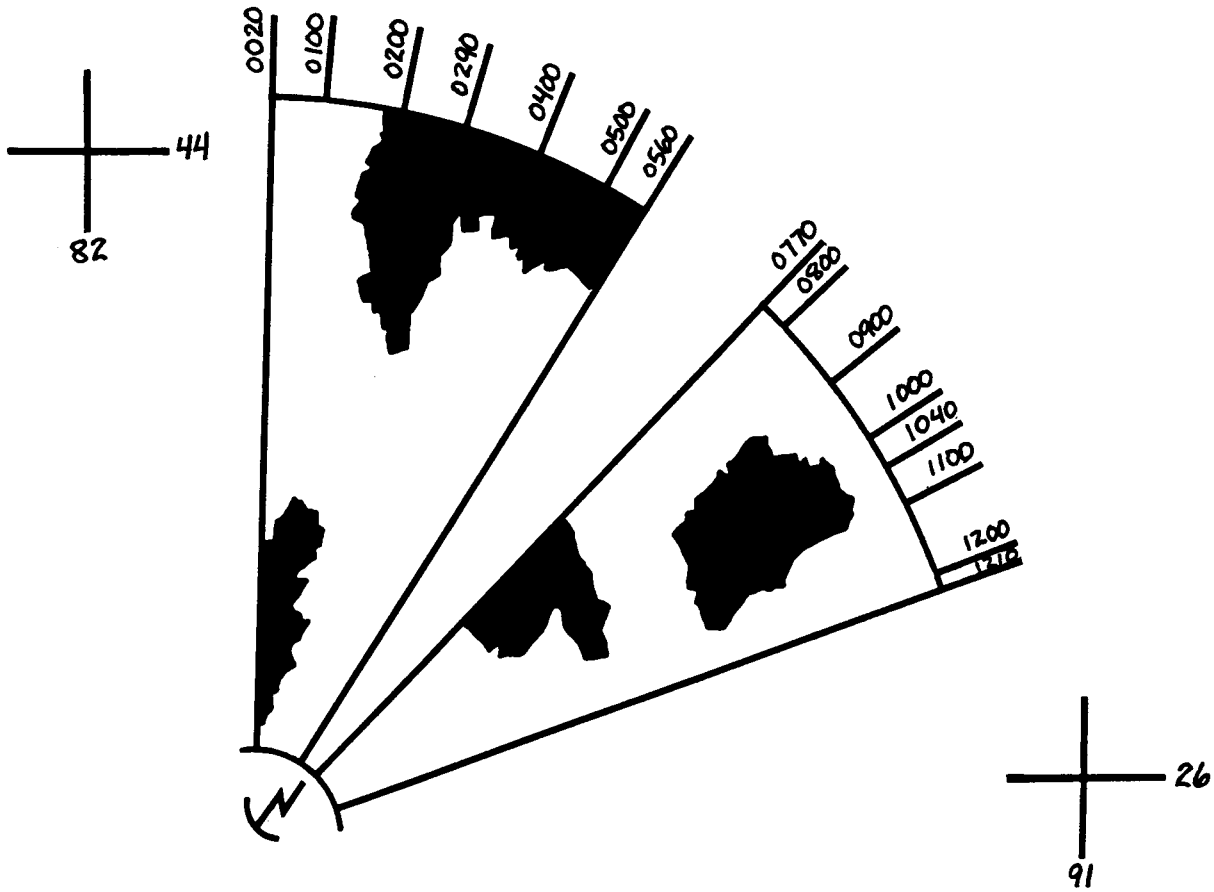

MAP: DEUTSCHLAND 1:50,000
SERIES: M745 L5118, 1982

NAME: SFC NEWBERRY
UNIT: BTRY A, 30th FA
DTG: 100400 MAY
WEATHER: PARTLY CLOUDY

RADAR GRID: MB863255
PRIMARY AZIMUTH: 0290
LEFT LIMIT: 0020
RIGHT LIMIT: 0560
ALTERNATE AZIMUTH: 1040
LEFT LIMIT: 0770
RIGHT LIMIT: 1210

(Classification)

SAMPLE TA TAB TO FA SUPPORT PLAN (Continued)

(Classification)

ENCLOSURE 2 (CAPABILITIES OVERLAY) TO TAB A (TARGET ACQUISITION) TO APPENDIX 3 (FA SUPPORT PLAN) TO ANNEX C (FIRE SUPPORT) TO OPERATION ORDER 1 (GOLD DRAGON), 52d Mech Div.

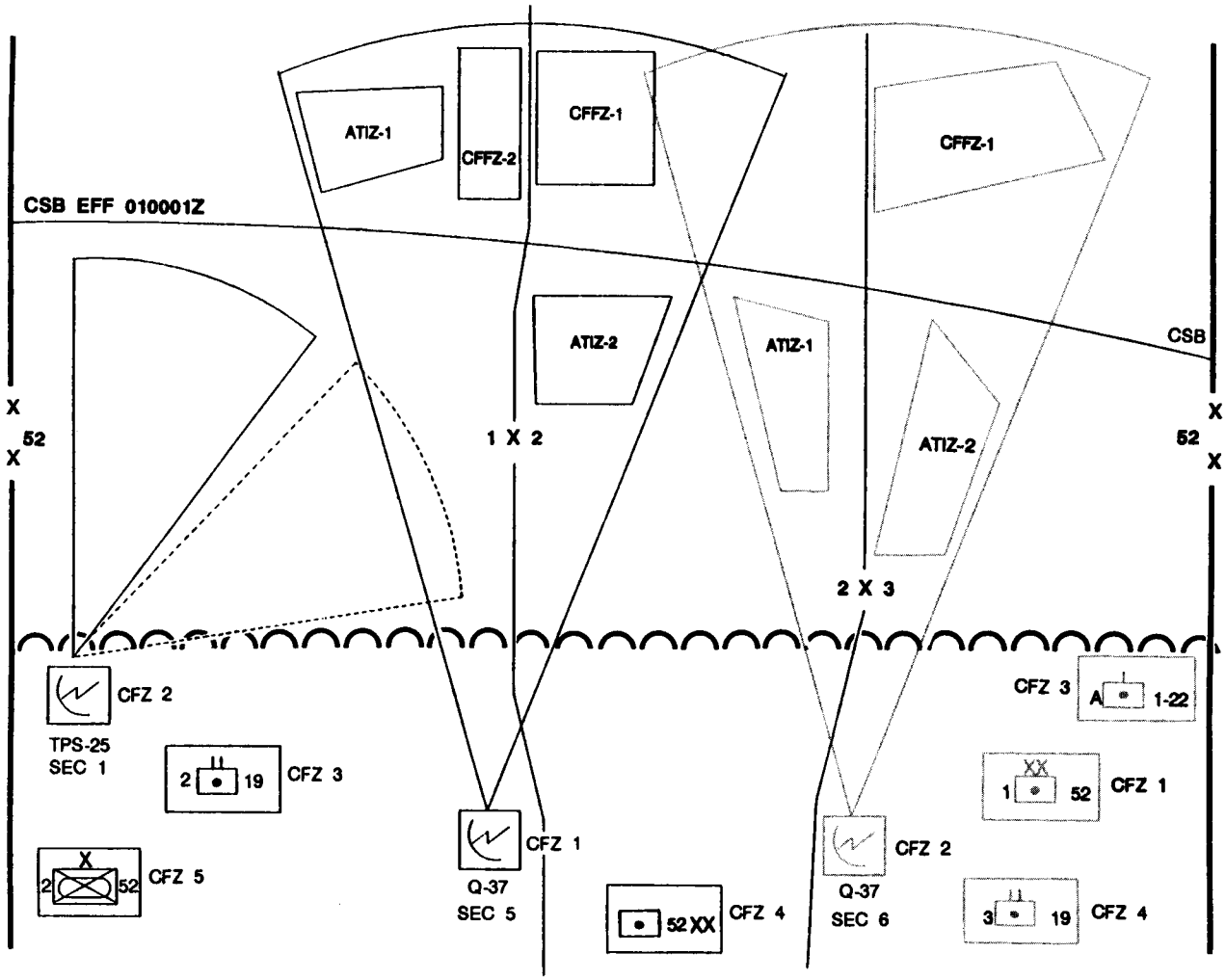

(Classification)

SAMPLE TA TAB TO FA SUPPORT PLAN (Continued)

(Classification)

ENCLOSURE 3 (RADAR DEPLOYMENT ORDER) TO TAB A (TARGET ACQUISITION) TO APPENDIX 3 (FA SUPPORT PLAN) TO ANNEX C (FIRE SUPPORT) TO OPERATION ORDER 1 (GOLD DRAGON), 52d Mech Div.

UNCLASSIFIED
(CLASSIFICATION WHEN FILLED IN)

RADAR DEPLOYMENT ORDER
For use of this form, see FM 6-121. The proponent agency is TRADOC.

SECTION 1/A/30	-25A -58B -36 -37	MISSION GS 52 DIVARTY	
LOCATION	Primary MB 863255	Alternate	

SEARCH SECTOR

	Left Edge	Right Edge	Minimum Range	Maximum Range
Primary Azimuth 0290	0020 mils	0560 mils	450 meters	18,280 meters
Alternate Azimuth 1040	0770 mils	1210 mils	450 meters	18,280 meters

EW THREAT ASSESSMENT

EW Threat (Yes) or No)	Affecting Friendly Assets (Yes) or No)	Type of Threat (Air or (Ground)

NOTE: Use the Firefinder survivability flowchart in FM 6-121 to determine emission limits.

CUEING AGENTS (CALL SIGN AND DESIGNATION) IN PRIORITY

M4T43 52 DIVARTY TOC	T6B91 52 DIV G2	K7C10 20 FA BDE TOC
A4C72 AFSO, SGC 3		

REPORTING CHANNELS

DIVARTY TA/INTEL M4T51	DIVARTY CMD M4T30

ZONE DATA

Type and Number	Description and /or Command Priority	Grid Coordinates of Zone Corner Points					

DA FORM 5957-R, SEP 1990

UNCLASSIFIED
(CLASSIFICATION WHEN FILLED IN)

(Classification)

SAMPLE TA TAB TO FA SUPPORT PLAN (Continued)

(Classification)

ENCLOSURE 4 (RADAR DEPLOYMENT ORDER) TO TAB A (TARGET ACQUISITION) TO APPENDIX 3 (FA SUPPORT PLAN) TO ANNEX C (FIRE SUPPORT) TO OPERATION ORDER 1 (GOLD DRAGON), 52d Mech Div.

UNCLASSIFIED
(CLASSIFICATION WHEN FILLED IN)

RADAR DEPLOYMENT ORDER
For use of this form, see FM 6-121. The proponent agency is TRADOC.

SECTION 5/A/30	-25A / -58B / -36 / (37)	MISSION GS 52 DIVARTY	
LOCATION	Primary NB 055242	Alternate	

SEARCH SECTOR

	Left Edge	Right Edge	Minimum Range	Maximum Range
Primary Azimuth 0300	−800 mils	+ 800 mils	3,000 meters	50,000 meters
Alternate Azimuth	mils	mils	meters	meters

EW THREAT ASSESSMENT

EW Threat (Yes or No)	Affecting Friendly Assets (Yes or No)	Type of Threat (Air or Ground)

NOTE: Use the Firefinder survivability flowchart in FM 6-121 to determine emission limits.

CUEING AGENTS (CALL SIGN AND DESIGNATION) IN PRIORITY

M4T43 52 DIVARTY TOC	T6B91 52 DIV G2	K7C10 20 FA BDE TOC
A4C81 AFSO, SEC 4		

REPORTING CHANNELS

DIVARTY TA/INTEL M4T51	DIVARTY CMD M4T30

ZONE DATA

Type and Number	Description and /or Command Priority	Grid Coordinates of Zone Corner Points					
CFZ 1	5/A/30 (Q37)	NB 058237	NB 058233	NB 050233	NB 050237		
CFZ 2	1/A/30 (TPS 25)	MB 867259	MB 867251	MB 859251	MB 859259		
CFZ 3	2-19 FA TOC	MB 923247	MB 923240	MB 918240	MB 918242		
CFZ 4	52 DIVARTY TOC	NB 145236	NB 152236	NB 145228	NB 152228		
CFZ 5	1 BDE TOC	MB 870239	MB 870234	MB 864234	MB 864239		
CFFZ 1	DAG PRI 1	NB 100783	NB 124783	NB 124710	NB 100710		
CFFZ 2	AA1 PRI 2	NB 030785	NB 067785	NB 067695	NB 030695		
ATTZ 1	SUSPECT ARTY	NB 025752	NB 025730	MB 971702	MB 952750		
ATTZ 2	SUSPECT RAG	NB 100470	NB 120470	NB 120450	NB 100450		

DA FORM 5957-R, SEP 1990

UNCLASSIFIED
(CLASSIFICATION WHEN FILLED IN)

(Classification)

APPENDIX H
FIELD ARTILLERY RADAR SUPPORT REQUIREMENTS

Employment considerations require that field artillery TA assets be deployed across the entire battlefield. For this reason, TA assets normally are attached to another FA unit for administrative and logistical support. This appendix outlines support requirements for field artillery TA assets.

SURVEY

The specific survey data required for each system are described below.

AN/TPQ-36 Weapons-Locating Radar

Required survey data for the AN/TPQ-36 are:

- Grid zone.
- Site location (universal transverse mercator [UTM] coordinates within 10 meters CEP).
- Distance from near stake (radar location) to far stake (orienting point). This distance should be at least 250 meters. (Minimum distance is 100 meters).
- Azimuth from near stake to far stake (0.4 mil PE).
- Vertical angle from near stake to far stake (0.5 mil PE).
- Altitude of the near stake (10 meters PE).

AN/TPQ-37 Weapons-Locating Radar

Survey data required for the AN/TPQ-37 are:

- Grid zone.
- Site location (UTM coordinates within 10 meters CEP).
- Distance from near stake (radar location) to far stake (orienting point). This distance should be at least 250 meters. (Minimum distance is 100 meters).
- Azimuth from near stake to far stake (0.4 mil PE).
- Altitude of the near stake (3 meters PE).

AN/TPS-25A or AN/TPS-58B Moving-Target-Locating Radar

Required survey data for the AN/TPS-25A or AN/TPS-58B are:

- Site location (UTM coordinates within 10 meters CEP).
- Azimuth from radar location to the orienting point (0.4 mil PE).
- Distance from radar location to the orienting point (at least 450 meters for TPS-25A and 300 meters for TPS-58B).
- Site location altitude (10meters PE).

COMMUNICATIONS

The supported unit must provide all communications data. These include signal

operation instructions (SOI) and, for digital communications, an authentication matrix, a codebook, and communications net materials. See Appendix E for further information on communications.

Radio Communication

The AN/TPQ-36 section normally operates on the DS battalion operations/fire net (VHF-FM)(D) and command net (VHF-FM)(V) as directed by the controlling headquarters. The AN/TPQ-37 and MTLR sections normally operate on the TA/intel net (VHF-FM)(D) and on the command net (VHF-FM)(V), as directed by the controlling headquarters. If a digital communications means is not available, the radar operator must use standard voice procedures over the command/fire net of the supported unit. These procedures are described in Appendix E of this manual and in FM 6-30, Chapter 4.

Wire Communications

Wire is the preferred means for both digital and voice communications. The unit to which the radar is attached is responsible for providing and installing the wire. However, in situations requiring frequent rapid moves or when the radar is located a distance from the headquarters, wire will probably not be used. Radio then becomes the primary means of communication.

ADMINISTRATION

When the radar section is attached to a unit, that unit is responsible for providing routine personnel and administrative support. The parent unit of the radar section will forward mail, pay, and routine distribution on a regular basis to the attached unit headquarters. The attached unit makes distribution to the radar section.

MESS

The unit to which the radar is attached supports the section with rations and water.

NON-RADAR MAINTENANCE

The supported unit is responsible for automotive and unit- level communications maintenance and turn-in of radios for repair or replacement, as required.

RADAR-SPECIFIC MAINTENANCE

FA radar systems are maintained at four maintenance; levels – unit, direct support, general support, and depot.

Unit-Level Maintenance

Unit maintenance consists of operator-performed scheduled preventive maintenance checks and services (PMCS) and unit-level scheduled and unscheduled maintenance as prescribed by the maintenance allocation chart. Each radar section should have on hand the prescribed essential repair parts stockage list (ERPSL) as authorized by the ERPSL manual for unit-level maintenance. These parts are mandatory and do not require demand support. The WLR mechanic (MOS 13R10X5) is responsible for performing all unit-level maintenance on WLRs. The target acquisition and surveillance radar repairer (MOS 39C10X5) is responsible for performing unit-level maintenance on the MTLRs. Both are also responsible for identifying equipment faults that require higher-level maintenance and for making sure the faulty equipment is job ordered to the support maintenance unit. The TA technician is trained to perform these supervisory tasks.

Direct Support Maintenance

The TA technician and unit mechanic request DS maintenance. The requests go through the controlling unit headquarters. The supported unit commander must be informed of all such requests to be sure that response of support is in keeping with the commander's TA priorities. Organization of an FA maintenance contact team will facilitate repair at the DS

level. Positioning the contact team at div arty will reduce response time. The radar repairman (39C10XS) from the contact team performs selected tests and repairs and replaces components. He has a complete set of tools, test equipment, and repair parts at his disposal. If on-site repairs cannot be made, the radar will be moved to a rear location for major repairs. At DS level, the mean time to repair the radar is 2 hours. Maximum time for repair is 4 hours with two persons. The TAB and the CTAD each have a trained DS-level Firefinder repairman (MOS 39C10XS) and DS-level test, measurement, and diagnostic equipment (TMDE) to isolate DS-level faults to facilitate repairs to Firefinder radars as well as MTLRs. The TMDE will be located in one of the AN/TPQ-37 WLR sections.

General Support Maintenance

General support maintenance of Firefinder-peculiar items is either repair or replacement. Major components of a Firefinder radar that are not repairable by maintenance are replaced in heavy units on a one-for-one basis through Class VII resupply. In light units, the operational readiness float (ORF) can be issued for temporary use until the radar is repaired.

Depot Maintenance

The depot can completely overhaul and recondition major end items and assemblies that are beyond the capabilities of field maintenance units. The appointed depot for Firefinder and AN/TPS-58B radars is Sacramento Army Depot. For the AN/TPS-25A, it is Tobyhanna Army Depot.

SUPPLY

The logistics concept for FA radar systems will not place any unusual demands on the supply system. The ERPSL governs the supply of Firefinder-peculiar items. Each support level has an ERPSL. Those quantities are demand-supported upward, but the minimum level prescribed must be maintained. The radar section

deploys with essential repair parts for the radar. (See the ERPSL manual, TM 11-5840-363-24P.) The supported unit restocks common expendable as they are consumed. The parent unit forwards system-peculiar expendable to the section on an as-required basis.

PETROLEUM, OILS, AND LUBRICANTS

The supported FA unit supplies Class III petroleum products to the radar section as part of its normal petroleum, oils, and lubricants (POL) distribution process.

NOTE: POL requirements for all FA radar systems are shown in the table below.

SECURITY

Because of its small size, the FA radar section cannot provide its own security in a tactical situation. For this reason, the radar section should coordinate with adjacent units for mutual security. Similarly, when deployed, the radar section cannot perform other security or administrative functions, such as forming NBC or crater analysis teams, that are parent unit requirements when sections are not deployed.

RADAR SYSTEM REQUIREMENTS FOR PETROLEUM, OILS, AND LUBRICANTS

FA RADAR EQUIPMENT	TYPE FUEL	TANK CAPACITY (GALLONS)	AMOUNT OF FUEL FOR 24-HOUR OPERATION	REFILL FREQUENCY	OIL REQUIRED FOR CHANGE AND FREQUENCY
M35A2 2 1/2-Ton Cargo Truck	Diesel	50	Per movement	Per movement	22 quarts, determine by oil sample
M98 HMMWV	Diesel	24.5	Per movement	Per movement	8 quarts, every 3,000 miles or 6 months
M923 or M925 5-Ton Cargo Truck	Diesel	81	Per movement	Per movement	27 quarts, determine by oil sample
AN/TPQ-36 Power Plant AN/MJQ-25	Diesel	25	27 gallons	Once every 24 hours	13 quarts, every 100 hours
AN/TPQ-37 Generator MEP-115A	Diesel	55	150 gallons	Three times every 24 hours	26 quarts, determine by oil sample
AN/TPS-25 Generator MEP-021A	Gasoline	3.75	24 gallons	Seven times every 24 hours	3 quarts, every 50 hours
AN/TPS-58B Generator MEP-25A	Gasoline	1.5	16 gallons	15 times every 24 hours	1 quart, every 50 hours

The deployed section falls under the responsibility of the supported unit for these functions.

METEOROLOGICAL DATA

Met data are crucial to the accuracy of hostile weapon location and friendly fire data. When using computer met messages, determine relative humidity from the TA met message. When using line 11 of the TA met message, obtain barometric pressure from line 03 of the computer met message. Required met data are:

- Relative humidity.
- Temperature.
- Barometric pressure.
- Altitude of met data.
- Wind speed (must be entered when greater than 20 knots).
- Wind direction.

Note: The first four items are not required for the AN/TPQ-36 radar.

OTHER SUPPORT

The section TA technician or section chief and the supported unit commander coordinate all other support on an as-required basis to include Class V support for the attached radar section.

GLOSSARY

Section I. ABBREVIATIONS AND ACRONYMS

ACIF	artillery counterfire information form
ACRV	armored command and reconnaissance vehicle
AFATDS	advanced field artillery tactical data system
AFSO	aerial fire support observer
AHB	attack helicopter battalion
ALGOR	algorithm
ALO	air liaison officer
AMTP	Army training and evaluation program mission training plan
AR	Army regulation
ARTEP	Army training and evaluation program
ASI	additional skill identifier
ATF	automatic terrain following
ATI	artillery target intelligence
ATIZ	artillery target intelligence zone
BCS	battery computer system
bde	brigade
bn	battalion
BOMREP	bombing report
btry	battery
C2	command and control
C3	command control and communications
cav	cavalry
cdr	commander
CDR	coordinate report (TACFIRE)
CFFZ	call-for-fire zone
CFL	coordinated fire line
CFO	counterfire officer
CFZ	critical friendly zone
cmd	command
COLT	combat observation/lasing team
comm	communication
COMNET	communications net
COMSEC	communications security
COP	command observation post (Soviet)
CP	command post
CPT	captain
CPX	command post exercise
CSB	common sensor boundary
CTAD	corps target acquisition detachment
CZ	censor zone
D	digital
DAG	division artillery group (Soviet)
DC	direct current
DF	direction-tiding
div	division
div arty	division artillery
DMA	Defense Mapping Agency
DMD	digital message device
DS	direct support
DST	decision support template
DTED	digital terrain elevation data
DTG	date-time group
DTOCSE	division tactical operations center support element
EAC	echelons above corps
ECCM	electronic counter-countermeasures
ECM	electronic countermeasures
ECOA	enemy course of action

ELINT	electronic intelligence
ELOS	electronic line of sight
ELP	electronic line printer
EMP	electromagnetic pulse
ERPSL	essential repair parts stockage list
EW	electronic warfare
EWO	electronic warfare officer
FA	field artillery
FAIO	field artillery intelligence officer
FCE	fire control element
FDC	fire direction center
FDS	fire direction system
FEBA	forward edge of the battle area
FEM	field exercise mode
FF	Firefinder
FFED	Firefinder elevation data
FIST	fire support team
FLOT	forward line of own troops
FM	field manual; frequency modulated
FO	forward observer
FSCOORD	fire support coordinator
FSE	fire support element
FSO	fire support officer
FTX	field training exercise
GS	general support
GSR	ground surveillance radar
HB	high burst
HE	high explosive
HHB	headquarters and headquarters battery
HMMWV	high-mobility multipurpose wheeled vehicle
HPT	high-payoff target
HQ	headquarters
HVT	high-value target
Hz	hertz
IEW	intelligence and electronic warfare
intel	intelligence
IPB	intelligence preparation of the battlefield
IPW	prisoner-of-war interrogation
km	kilometer
kw	kilowatt
LO	liaison officer
LOS	line of sight
LT	lieutenant
m	mil
MAC	maintenance allocation chart
maint	maintenance
MDS	meteorological data system
met	meteorology
METL	mission-essential task list
METT-T	mission, enemy, terrain, troops, and time available
MFR	mission fired report
MI	military intelligence
MLRS	multiple launch rocket system
mm	millimeter
MOI	message of interest
MOPP	mission-oriented protective posture
MORTREP	mortar bombing report
MPI	mean point of impact
MSG	master sergeant
MTI	moving-target indicator
MTLR	moving-target-locating radar
MTOE	modification tables of organization and equipment
NAI	named area of interest
NATO	North Atlantic Treaty Organization
NBC	nuclear, biological, chemical
NCO	noncommissioned officer
NCS	net control station
nuc	nuclear
OB	order of battle

OF	observed fire
OP	observation post
OPCON	operational control
OPLAN	operation plan
OPORD	operation order
ops/F	operatios/fire (radio net)
ORF	operational readiness float
PADS	position and azimuth determining system
PCM	pulse code modulation
PE	probable error
PFC	private first class
PLL	prescribed load list
plt	platoon
PMCS	preventive maintenance checks and services
POL	petroleum, oils and lubricants
pri	priority
PW	prisoner of war
QSTAG	quadripartite standardization agreement
R	reinforcing
RAG	regimental artillery group (Soviet)
RATELO	radiotelephone operator
RATT	radio teletypewriter
RDF	radio direction finding
RDO	radar deployment order
recon	reconnaissance
ref	reference
ROCKREP	rocketing report
RSO	reconnaissance and survey officer
SCP	survey control point
SEAD	suppression of enemy air defenses
sec	section
SFC	sergeant first class
SGT	sergeant
SHELREP	shelling report
SIGINT	signals intelligence
SOI	signal operation instructions
SOP	standing operating procedure
SP	self-propelled
SPC	specialist
SPCE	survey planning and coordination element
SPCO	survey planning and coordination officer
SSG	staff sergeant
STANAG	standardization agreement
TA	target acquisition
TAB	target acquisition battery
TACFIRE	tactical fire direction system
TAI	target area of interest
TAMMS	The Army Maintenance Management System
TC	training circular
TDA	target damage assessment
TF	task force
TFT	tabular firing table
TLE	target location error
TM	technical manual
TMDE	test, measurement and diagnostic equipment
TOC	tactical operations center
TOE	tables of organization and equipment
TSOP	tactical standing operating procedure
TVA	target value analysis
USAFAS	US Army Field Artillery School
USAF	United States Air Force
UTM	universal transverse mercator
V	voice
VFMED	variable-format message entry device
	very high frequency
WLR	weapons-locating radar
WO	warrant officer

Section II. **DEFINITIONS**

artillery target intelligence zone- An area in enemy territory that the maneuver commander wants to monitor closely. Weapon locations in this zone will be reported immediately. Their priority is exceeded only by targets in a critical friendly zone or a call-for-ilre zone.

aspect angle- The relative angle between the path of a projectile, or moving target, and the beam of the radar observing it. For example, if the projectile and the radar beam are perpendicular, the aspect angle is 1,600 mils.

call-for-fire zone- An area in enemy territory that the maneuver commander considers extremely important to neutralize fires from by immediate counterfire.

centralized control- The mode in which control is kept at a higher echelon, such as div arty or corps.

common sensory boundary- A line established by the division artillery or FA brigade that divides TA areas of search into close and deep areas for the AN/TPQ-36 and AN/TPQ-37 respectively. This boundary is established to prevent target duplication and maximize range capabilities of the radars.

counterfire- Fire intended to destroy, neutralize, or suppress enemy weapons.

counterpreparation fires- An intense volume of prearranged fires delivered when the threat of enemy attack is discovered.

counterreconnaissance- Action taken against enemy reconnaissance elements.

critical friendly zone- An area in which are located friendly units or units that the maneuver commander designates as critical.

cueing- External actions or inputs that cause a surveillance or target acquisition device to turn on and search a suspect area.

cueing agent- One who is authorized to direct a TA sensor to turn on and search an area of interest.

decentralized control- The mode in which control is given to lower echelons, such as battalion or battery.

electronic line of sight- A straight, unobstructed path from the transmit antenna of an emitter to either a reflecting object or a receive antenna.

forward edge of the battle area- The forward limit of the main battle area.

forward line of own troops- A line that indicates the most forward positions of friendly forms in any kind of military operation at a specific time. The PLOT may be at, beyond, and short of the FEBA, depicting the nonlinear battlefield.

high-payoff target- A high-value target that must be acquired and successfully attacked for the success of the friendly commander's mission.

high-trajectory weapons- Weapons such as mortars that fire projectiles at an angle exceeding 800 mils.

high-value target- An asset the enemy commander requires for the successful completion of his mission.

intelligence preparation of the battlefield- A continuous systematic approach to analying the enemy, weather, and terrain in a specific geographical area. It integrates enemy doctrine with the weather and terrain as they relate to mission and the specific battlefield environment. This is done to determine and evaluate enemy capabilities, vulnerabilities, and probable courses of action.

low-trajectory weapons- Weapons such as artillery or rockets that tire projectiles at angles less than 800 mils.

mask- High ground in front of the antenna that blocks the transmitted radar beams.

mask angle- The vertical angle from the radar to the top of the mask, or screening crest.

real-the cueing- Planned procedure in which the radar is cued and then locates and reports the target. Immediate fire is then directed on the target.

screening crest- A hill or ridge located in front of a radar set to mask it from unwanted returns (clutter) at close range and to provide security against electronic detection or jamming. A screening crest also prevents visual observation and attack by direct fire weapons.

sector of search- An area that a target acquisition or surveillance device is required to search.

target- An area designated and numbered for future firing. Also, in radar (NATO), a target generally is any discrete object that reflects or retransmits energy back to the radar equipment. Specifically, a target is an object of radar search or surveillance.

target acquisition- The detection, identification and location of a target in sufficient detail to permit attack by friendly weapons.

target acquisition capabilities overlay- An overlay that graphically depicts the target acquisition coverage of a unit. The overlay is constructed and maintained by the unit controlling headquarters S2. It is used to help S2s plan and control assigned TA assets.

target intelligence- The product resulting from the collection, evaluation and interpretation of target information.

target value analysis- An analytical tool used in the targeting process by which the maneuver commander–

- Provides focus for his TA effort.
- Identifies priorities for the engagement of enemy targets that will facilitate the success of his mission.
- Identifies effects criteria.
- Permits planning for identified contingencies based on enemy options available when the enemy operation fails.
- Can better estimate friendly unit capabilities.

track volume- The portion of a projectile trajectory that a weapons-locating radar tracks.

tunneling- Positioning a radar so that vegetation is to the sides and rear in order to reduce the side and back lobes of radiation and decrease radar vulnerability to direction-finding equipment.

visibility diagram- A diagram depicting the capability of a TA sensor to observe a given area.

Section III. **TACFIRE AND BCS MNEMONICS**

ATI	artillery target intelligence
CDR	coordinate report
DA	division artillery
FM	fire mission
FOCMD	forward observer command (message)
INTM	initiate mission
MFR	mission fired report
MOI	message of interest
OBCO	observer location
PTM	plaintext message
RFAF	request for additional fire
SPRT	support (program)
SUBS	subsequent commands message
SYS	system

REFERENCES

Users should frequently consult Department of the Army Pamphlet 25-30 for the latest changes to or revisions of references listed herein and for new publications relating to material covered in this publication.

REQUIRED PUBLICATIONS

Required pubiications are sources that users must read in order to understand or to comply with this publication.

Army Regulations (ARs)

310-25	Dictionary of United States Army Terms (Short Title:AD)
310-50	Authorized Abbreviations and Brevity Codes

Department of the Army (DA) Forms

1594	Daily Staff Journal or Duty Officer's Log
2185-R	Artillery Counterfire Information
4695	Target Card
531O-R	Firefinder Friendly Fire Log
5957-R	Radar Deployment Order

Field Manuals (FMs)

6-2	Field Artillery Survey
6-15	Field Artillery Meteorology
6-20	Fire Support in the AirLand Battle
100-5	Operations

Technical Manuals (TMs)

11-5840-217-10	Operator's Manual for Radar Set AN/TPS-25A
11-5840-348-12	Operator's and Organizational Maintenance Manual for Radar Set AN/TPS-58 & -58B
11-5840-354-10-1	Operator's Manual for Radar Set AN/TPQ-36
11-5840-355-10-1	Operator's Manual for Radar Set AN/TPQ-37
(C)11-5840-355-10-2	Operator's Manual for Radar Set AN/TPQ-37(V)(U)
11-5840-363-24P	Essential Repair Parts Stockage List and Recommended Support Items List to Support Firefinder Radar Sets AN/TPQ-36 Mortar-Locating Radar and AN/TPQ-37(V) Artillery-Locating Radar

11-6660-206-12	Operator's and Organizational Maintenance Manual for Rawin Sets AN/GMD-1A, AN/GMD-lB, AN/GMD-lC, and AN/GMD-lD.
11-6660-265-10-1	Operator's Manual for Meteorological Data System AN/TMQ-31.

RELATED PUBLICATIONS

Related publicatlons are sources of additional information. They are not required in order to understand this publication.

Army Training and Evacuation Programs (ARTEPs)

6-115-MTP	Field Artillery Cannon Battalion Headquarters and Headquarters Battery Headquarters, Headquarters and Service Battery; or Service Battery
6-300	Corps Field Artillery Section, Division Artillery, and Field Artillery Brigade
6-303-30-MTP	Mission Training Plan for the Target Acquisition Battery and the Corps Target Acquisition Detachment

Field Manuals

3-3	NBC Contamination Avoidance
6-20-2	Division Artillery, Field Artillery Brigade, and Field Artillery Section (Corps)
6-20-10	Tactics, Techniques, and Procedures for the Targeting Process
6-20-30	Tactics, Techniques, and Procedures for Fire Support for Corps and Division Operations
6-20-40	Tactics, Techniques, and Procedures for Fire Support for Brigade Operations (Heavy)
6-20-50	Tactics, Techniques, and Procedures for Fire Support for Brigade Operations (Light)
6-30	Observed Fire Procedures
6-50	Tactics, Techniques, and Procedures for the Field Artillery Cannon Battery
7-20	The Infantry Battalion (Infantry, Airborne, Air Assault)
7-30	Infantry, Airborne, and Air Assault Brigade Operations
11-50	Combat Communications Within the Division
17-95	Cavalry Operations
19-40	Enemy Prisoners of War, Civilian Internees, and Detained Persons
21-26	Map Reading and Land Navigation
24-1	Combat Communications
24-18	Tactical Single-Channel Radio Communications Techniques
34-1	Intelligence and Electronic Warfare Operations
34-3	Intelligence Analysis

71-100 (HTF)	Armored and Mechanized Division Operations (How to Fight)
90-2	Battlefield Deception
100-15	Corps Operation
101-5	Staff Organization and Operations

Miscellaneous Literature

DST-1160G-029-85 (27 Jan 89) (Change 1) Projectile Fragment Identification Guide-Foreign (U)

NOTE: To obtain DST-1160G-029-85, address request to
US Army Foreign Science and Technology Center
ATTN: AIFPO 220 Seventh St NE
Charlottesville, VA 22901-5396

Security Classification Guide for Mortar Locating Radar Set AN/TPQ-36 (6 February 1989)

Security Classification Guide for Mortar Locating Radar Set AN/TPQ-37 (6 February 1989)

NOTE: These guides can be requested from Project Manager Radar, AMC PEO-IEW-RDR, Fort Monmouth, NJ 07703-5000.

Standardization Agreements (STANAGs)/Quadripartite Standardization Agreements (QSTAGs)

2008/503	Bombing, Shelling, Rocketing, Mortaring and Location Reports
2029/514	Methods of Describing Ground Locations, Areas, and Boundaries
2103/117	Reporting Nuclear Detonation, Biological and Chemical Attacks, and Predicting and Warning of Associated Hazards and Hazards Area
2147/221	Target Numbering System (Nonnuclear)
2867/246	Radiotelephone Procedures for the Conduct of Artillery Fire
2887/217	Tactical Tasks and Responsibilities for Control of Artillery

NOTE: STANAGs and QSTAGs can be obtained from Naval Publications and Forms Center, 5801 Tabor Avenue, Philadelphia, PA 19120. Use DD Form 1425 to requisition documents.

Training Circulars (TCs)

6-40	Field Artillery Manual Cannon Gunnery
6-40A	Field Artillery Automated Cannon Gunnery

INDEX

A

Administrative support, H-2
Aerial fire support observers, G-2
Algorithm authentication, E-3
AN/TPQ-36 radar, 3-1, 4-3, E-1, H-1
AN/TPQ-37 radar, 3-2, 4-3, 5-5, E-1, H-1
AN/TPS-25A radar, 3-3, 5-5, H-1
AN/TPS-58B radar, 3-4, H-1
Artillery counterfire information form, A-1, B-9
    example, B-10
Artillery target intelligence zone, 4-6
Aspect angle, 3-7, 4-11
Attack at depth, 1-3
Augmentation, 5-5
Authentication, E-2

B

Background, 4-16, 4-18
Battalion task force (light), 5-1
Bombing report, B-9
Brigade task force (light), 5-3

C

Cable lengths, 3-7
Call-for-fire zone, 4-6
Capabilities overlay, G-4
Center of crater method (crater analysis), B-3
Centralized control, 4-5
Censor zone, 4-7
Command and control, 4-5, 6-1
Commander, TAB, 2-2
Common sensor boundary, 4-8
Common survey control, 3-6
Communications, 3-5, 4-10, 4-12, 6-2, E-1, H-1
Concealment, 3-5, 4-14
Contingency force, 5-1
Corps artillery, 1-3
Corps target acquisition detachment, 2-6, 5-5
Counterfire 1-3, 6-1
    officer, 2-4, 4-4, G-5
    methods, B-2 through B-5
Cover, 3-5, 4-14
Crater analysis, B-1
Crater ray, A-4
    color-coding scheme A-5
Critical friendly zone, 1-2, 4-6
Cueing, 4-10
Cueing agent, 4-10, C-6, G-5
Curvature template (crater analysis), B-11

D

Daily staff journal, A-3, A-6
Datum plane registration, C-3
Decentralized control, 4-5
Decide, detect, deliver methodology, 1-1
Decision support template, 1-1
Defensive operations, 4-19
Depot maintenance, H-3
Detection probability, 4-1
Digital communications, E-2 through E-4
Direct support battalion, 1-3, 5-3
    S2, G-5
Direct support maintenance, H-2
Division artillery, 1-3
    S2, 4-4
    S3, 4-4
    tactical operations center, 1-3, A-6
Duty journal, A-3, A-6

E

Effective range capability, 4-3
Electronic line of sight, 3-6, 4-13
Electronic warfare threat, 3-8, 4-2, G-5

F

Field artillery target acquisition, 1-2, 4-1
Field artillery brigade, 1-3, 5-7, 6-1
Field exercise mode, C-6
    overlay, C-7
    scenario development, C-8
Fire control element, A-7
Firefinder, 1-1
Fire support coordinator, 1-2, 1-3, 4-3, 6-1
Fire support officer, 4-4
Flash ray, A-5
Flat mask, F-1
Fragment analysis, B-6
Friendly fire log, C-4
Friendly fire mode, C-1
    missions, C-2
Fuze furrow method (crater analysis), B-3
Fuze tunnel method (crater analysis), B-5

G

General support maintenance, H-3
Ground reconnaissance, 3-5
Gunnery team, C-6

H

Hasty visibility diagram, D-5
High-burst registration, C-3
High-payoff target, 1-1
High-value target, 1-1

I

Impact-predict registration, C-3

L

Liaison, 6-2
Light division, 5-1
    deployment, 5-4

M

Main axis method (crater analysis), B-4
Maintenance support, H-2
Maneuver commander, 1-1, 1-3, 1-4
Manual authentication, E-4
Manual target processing, A-1, A-9
Map reconnaissance, 3-5
Mask
    angle, 4-2, 4-15, F-1
    considerations, F-1
    variation, F-1
Mean-point-of-impact registration, C-2, C-3
Mess support, H-2
Met section (TA platoon), 2-6
Met support, H-5
Missions, 3-1, 3-3, 4-1, C-1, G-3
Mortar bombing report, B-9
Moving-target-locating radar, 1-2, 1-4, 3-3, 4-18, D-1
    section, 2-6, 2-7, 2-10, 5-5

O

Offensive operations, 4-18
Operations element, A-7
Optimum screening crest, 3-9
Optimum site, 3-8, 3-9, 4-16, 4-18
Order-of-battle
    section, 5-5, A-2, A-6
    workbook, A-6
Orienting data, C-1

P

Petroleum, oil and lubricants support, H-4
Planning ranges, 3-2, 4-3
Planning table, 3-10, 3-11
Position and azimuth determining system, 2-7
Position selection, 3-4, 4-2, 4-12
Power generator equipment repairer, duties of 2-12
Processing section
    CTAD, 5-5
    TAB, 2-2
Purging, target, A-7

R

Radar deployment order, G-5
Radar mechanic, duties of, 2-12
Radar operator, duties of, 2-12
Radar platoon, 2-4
    leader, duties of, 2-5
    sergeant, duties of, 2-5
Radar technician, TA, duties of, 2-11
Radiating time, 3-7, 4-16, 4-18
Radio communications, H-2
Reconnaissance, 3-4
Rehearsals, 4-8
Rocket craters, B-6
Rocketing report, B-9
Rotating band, B-7
    seat, B-7
Routes of approach, 3-5, 4-14

S

Screening crest, 3-7, 3-9, 4-14, 4-16
Search fence, C-1
Section chief, duties of, 2-11
Sectors of search, 4-3, 4-16, 4-18
Security, 3-5, 4-14, H-4
Senior radar operator, duties of, 2-11
Shell fragment analysis, B-6
Shelling report, A-4, B-9
Side spray method (crater analysis), B-3
Site altitude, 3-6
Site, optimum, 3-8
Slope, 3-6, 4-15
Splinter groove method (crater analysis), B-5
Supply support, H-3
Survey, 3-6, 4-14, H-1
Survey platoon (TAB), 2-2
Survey section (TA platoon), 2-6
Survivability, 3-7, 4-16, 4-18
    flowchart, 3-8 through 3-9
    matrix, 4-17
Suspect target, A-2, A-4

T

Table authentication, E-3
Tactical fire direction system, A-1, C-8
Target
    card, A-1, A-2
    damage assessment, 2-2, A-7
    data, A-1
    indicators, A-4
    processing, A-1, A-9
    production map, A-6
    production section (div arty), 2-2, 5-5, A-2, A-6
    purging, A-7
    symbol, A-3

Target acquisition
battery, 2-1, 2-3
detachment, corps, 2-6, 5-5
integration, 1-2, 2-2
platoon, 2-5
radar technician, duties of, 2-11
section chief, duties of, 2-11
surveillance radar repairer, duties of, 2-12
tab to FA support plan, G-1
Targeting
element, 5-5, C-8
methodology, 1-1
process, 1-1
Track volume, 3-7, F-2
calculation of, F-3
example, F-4
Tunneling, 4-16

U

Unit-level maintenance, H-2

V

Vertical scan, F-1
Visibility
diagram (overlay), D-4
profile, D-1
profile, hasty, D-5
Voice transmission procedures, E-2

W

Weapons-locating radar, 1-2, 1-4
section, 2-6, 2-7, 2-8, 2-9
Wire communications, E-2, H-2

Z

Zones, 4-6, G-5